SOLAR WATER HEATING ADDITION

FOR

_____

(enter Customer name)

SCOPE: Use this plan ONLY for solar domestic water heating systems having an estimated output of equal to or less than 82,090 Btu or 0.821 therms (< 30 kWth) on the roof of a one- or two-family dwelling or accessory structure and used for domestic water heating. Articles of the California Plumbing Code (CPC) or California Mechanical Code (CMC) or other California health and safety codes shall apply.

MANUFACTURER'S SPECIFICATION SHEETS ARE PROVIDED for proposed collector, controller, pump, storage tank/heat exchanger/ heat transfer fluid (if applicable) and mounting systems. Equipment intended for use with SWH system shall be identified and listed for the application.

Job Address: _____ Permit #: _____

Contractor/Engineer Name: _____ License # and Class: _____

Signature: _____ Date: _____ Phone Number: _____

Email: _____

Circle A or B :

Total # of Collectors Installed 2 Total Area of Collectors A 64 sqft B 40 sqft

Collector Certification Number (include certifying agency) A SRCC OG-100 #10001938 B SRCC OG-100 #10002012

System Certification Number (include certifying agency) A SRCC OG-300 #2010017C B SRCC OG-100 #30004214

Max Height Above Roof not to exceed roof height Height Above Ground not to exceed 30 ft

Major Components (for SDWH systems)

Circle A or B :

Solar Tank Make/Model Thermo-Miser Gallons A 80 B 60 Insulation R- 15.2 Pressurized? Tank yes, Collector loop no)

Heat Exchanger Make/Model heat exchanger integral to solar tank Number of Walls single Heat Exchange Fluid water

Solar Control Make/Model EagleSun DTC-ES-1 (Model AU7700-1)

Solar Pump/Circulator Make/Model GRUNDFOS UP 15-100F

Expansion Tank Make/Model not applicable Appropriately Sized for Use? N/A

Mounting Hardware Make/Model or Type MSC Series Flush Mount, MSC-FM

Do all the above data match substantially the data used for certification? _____

LOCATION MAP

TABLE OF CONTENTS

ST01	TITLE PAGE
ST02	ROOF PLAN / MOUNTING ATTACHMENTS
ST03	SYSTEM DIAGRAM / SCHEDLE OF MAJOR COMPONENTS
ST04	WIND / SEISMIC CALCULATIONS
ST05	STRUCTURAL CRITERIA AND REVIEW
ST06	ANCHOR LAYOUT DIAGRAM
ST07	TANK STRAPPING
ST08-ST11	PRODUCT SPECIFICATIONS
ST12-ST16	PRODUCT CERTIFICATONS
ST17-ST21	SYSTEM ELIGIBILTY AND INSPECTION GUIDE

INSTALLATION NOTES

1. THIS IS A PLAN SET TAILORED TO THE AET DRAINBACK SYSTEM WHICH IS INTENDED TO ENABLE CONTRACTORS TO SATISFY THE REQUIREMENTS AND THE INTENT OF THE STATE WIDE EXPEDITED PERMITTING PROCESS.
2. THIS PLAN IS INTENDED TO CONFORM TO CURRENT VERSIONS OF THE CALIFORNIA BUILDING CODE, CALIFORNIA PLUMBING CODE AND SOLAR GUIDELINES PUBLISHED AND ENFORCED IN ACCORDANCE WITH:
   a. UNIFORM SOLAR ENERGY CODE (USEC), NSF/ANSI 61
   b. CONTRACTOR SHALL PROVIDE AHJ WITH SITE-SPECIFIC ROOF SKETCH FOR PROJECT AND OTHER INFORMATION REQUIRED BY GUIDELINES. OTHERWISE, CONTRACTOR SHALL ARRANGE WITH ENGINEER OF RECORD FOR SITE-SPECIFIC PLAN.
   c. CONTRACTOR SHALL CONFORM TO WHATEVER APPLIES IN SOLAR GUIDELINES AS WELL AS ANY OTHER JURISDICTIONAL REQUIREMENTS ESTABLISHED BY RESPECTIVE AHJ.
3. THIS PLAN IS INTENDED TO PROVIDE ALL ESSENTIAL INFORMATION (EXCEPT ADDITIONAL SPECIAL REQUIREMENTS OF a., b., AND c. ABOVE) NEEDED BY AHJ AND INSTALLERS FOR INSTALLATION ON BUILDINGS WHICH ARE:
   a. RISK CATEGORY I OR II
   b. EXPOSURE CATEGORY B OR C
   c. ROOF SLOPE RANGING FROM 1 TO 29 DEGRESS (0.2:12 ~ 6.7:12)
   d. MID COLLECTOR HEIGHT 30-FT OR LESS
   e . ROOF PRESSURE ZONES Z1 OR Z2 PER ASCE 7
   f. CONTRACTORS HAVING PROJECTS WITH MORE SEVERE SITE CONDITIONS ARE DIRECTED TO CONTACT ENGINEER OF RECORD FOR SITE-SPECIFIC ENGINEERING.
   g. UPLIFT WIND PRESSURES LESS THAN -68 PSF (POUNDS PER SQUARE FOOT).
4. SOLAR COLLECTORS SHALL BE INSTALLED:
   a. AT TILT ANGLE NOT LESS THAN 1 DEGREES NOR MORE THAN 29 DEGREES FROM HORIZONTAL
   b. AT AN AZIMUTH ORIENTATION OF 90 DEGREES TO THE EAST AND 269 DEGRESS TO THE WEST (COMPASS)
   c. IN ACCORDANCE WITH ORIGINAL EQUIPMENT MANUFACTURER INSTRUCTIONS
   d. IN ACCORDANCE WITH ATTACHED DETAILS SHOWN HEREON AND APPROVED BY AHJ FOR PROJECT.
   e. WITHIN ROOF PRESSURE ZONES Z1 AND Z2
      Z3 SHALL NEVER BE USED WITHIN LADBS JURISDICTION
      Z3 MAY ONLY BE USED WITH SITE-SPECIFIC ENGINEERING ELSEWHERE.
5. WIND PRESSURE RATING: AET SDHW COLLECTORS HAVE PASSED MIAMI TESTING LABS WIND LOAD TESTING OF -102 PSF PER ASTM E-330 (MTL FILE NUMBER 95-1249).
6. ENGINEER OF RECORD CERTIFIES THAT OEM INSTALLATION KITS ARE COMPLIANT WITH CBC AND CPC. THERE SHALL BE NO SUBSTITUTION OF MATERIALS FROM OTHER VENDORS.
7. CONTRACTOR SHALL SELECT AND SUBMIT WITH PERMIT APPLICATION SPECIFIC INFORMATION AND DETAILS SHOWN HEREON OR LINKED HERETO BY PRINTING, CIRCLING, CHECK MARKING, INITIALING, AND/OR OTHER METHOD APPROVED BY AHJ.
8. ENGINEER OF RECORD AVAILABLE FOR QUESTIONS - EMAIL PREFERRED j.alger@aetsolar.com

SOLAR UNIT WIND FORCES

SOLAR COLLECTORS INSTALLED PER THIS PLAN SHALL NOT FORM PART OF THE BUILDING ENVELOPE LIKE A WINDOW, DOOR, SKYLIGHT, OR BIPV. SOLAR COLLECTORS SHALL BE MOUNTED ABOVE THE ROOF SURFACE SIMILAR AN AC CONDENSER, THEREFORE, SOLAR COLLECTORS THUS INSTALLED DO NOT REQUIRE A PRESSURE RATING AS DO COMPONENTS SUCH AS WINDOWS, DOORS, & SKYLIGHTS.

STRUCTURAL NOTES

1. SOLAR COLLECTORS ARE TO BE MOUNTED IN PRESSURE ZONES Z1 AND Z2. SEE TABLE 3 FOR RIDGE OFFSET TO Z1, Z2, OR Z3. **THE COLLECTOR SHOULD NEVER EXCEED THE EXISTING BUILDING HEIGHT AT THE HIGHEST POINT.**
2. WHEN MOUNTED PER THESE INSTRUCTIONS, THE SOLAR SYSTEM DOES NOT EXCEED FOUR POUNDS PER SQUARE FOOT (4 PSF).
3. SOLAR COLLECTORS ARE TO BE INSTALLED IN THE SAME PLANE AS THE ROOF, THE MOUNTING SYSTEM RAISES THE SOLAR COLLECTORS 3.75" ABOVE THE FINISHED ROOF TO ALLOW THE SHEDDING OF WATER AND WIND-BORNE DEBRIS.
4. THE CONCENTRATED LOAD IMPOSED BY THE ADDITION OF THE FULLY WETTED SOLAR COLLECTOR(S) IS 31.5 LBS PER MOUNTING POINT,
5. SOLAR COLLECTORS MOUNTS ARE TO BE ANCHORED DIRECTLY ABOVE AND INTO THE SOLID ROOF RAFTERS WITH 3/8"-16 DIAMETER LAG SCREWS, 4 INCHES IN LENGTH WHICH EXCEED THE MINIMUM REQUIREMENT OF 5/16" DIA x 2½" EMBEDMENT. CONTRACTOR SHALL CONSULT THE ENGINEER OF RECORD FOR MOUNTING ALTERNATIVES SHOULD THE INSTALLATION REQUIRE SUCH.

ALTERNATE ENERGY TECHNOLOGIES, LLC.
1345 ENERGY COVE COURT - GREEN COVE SPRINGS, FLORIDA 32043

NOTICES:
The thoughts and ideas expressed here within are the exclusive property of Alternate Energy Technologies, LLC. The use of these materials, without the written consent of AET, is not permitted.

TITLE PAGE

DRAWING TITLE: SOLAR DOMESTIC HOT WATER

REVISIONS:

SEAL:

DATE:
DRAWN:
SCALE:
SHEET: 1 of 21

ST01

SOLAR DOMESTIC WATER HEATING STANDARD PLAN

GENERAL REQUIREMENTS

A.	System size is 30 kWth (462 square feet of collector) or less	☐ Y	☐ N
B.	The solar array is roof-mounted on one- or two-family dwelling or accessory structure	☐ Y	☐ N
C.	The solar collector arrays will not exceed the maximum legal building height	☐ Y	☐ N
D.	Solar collectors are certified by an accredited listing agency	☐ Y	☐ N
E.	Solar domestic water heating system is certified by an accredited listing agency	☐ Y	☐ N
F.	Permit application is completed and attached	☐ Y	☐ N
G.	System schematic is included	☐ Y	☐ N
H.	List of major components to match system schematic	☐ Y	☐ N
I.	Heat transfer fluid is either water or a nontoxic fluid	☐ Y	☐ N

PLUMBING REQUIREMENTS

A.	Adequate extreme temperature protection is provided	☐ Y	☐ N

STRUCTURAL REQUIREMENTS

A.	A completed Structural Criteria and supporting documentation is attached (as required)	☐ Y	☐ N

Notes:
These criteria are intended for streamlined solar permitting process.
1. If any items are checked NO, revise design to fit within Eligibility Checklist, otherwise permit application may go through standard process.

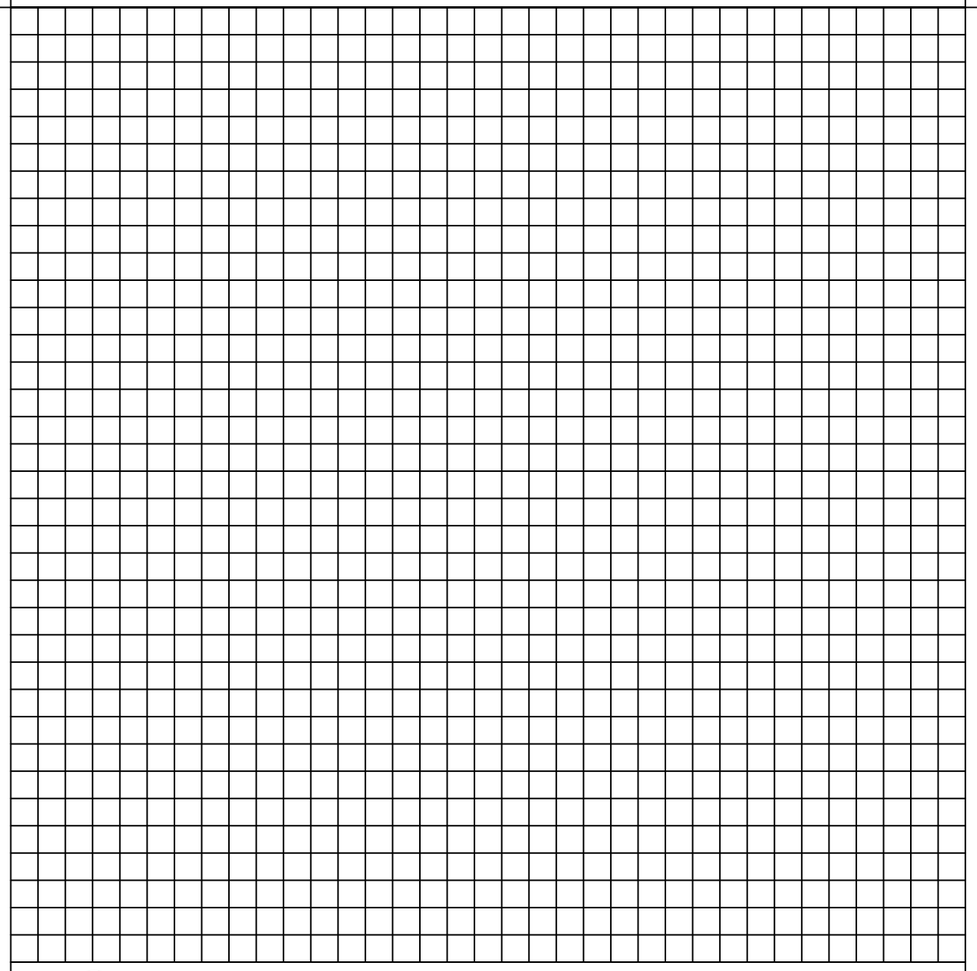

01 ROOF PLAN
HAND SKETCH TO BE PROVIDED BY CONTRACTOR / INSTALLER

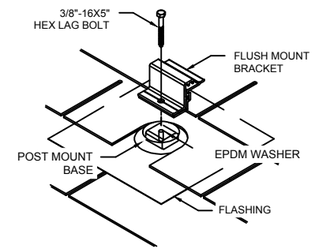

01 CONNECTION DETAIL - FLUSH MOUNT (RAISED FLASHING)
USING MANUFACTURERS HARDWARE FOR PARALLEL MOUNT ON SLOPING ROOFS

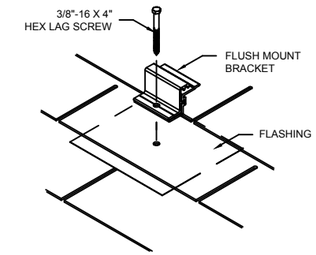

05 CONNECTION DETAIL - FLUSH MOUNT (FLUSH FLASHING)
USING MANUFACTURERS HARDWARE FOR PARALLEL MOUNT ON SLOPING ROOFS

INSTALLER TO CIRCLE APPLICABLE MOUNTING SOLUTION(S)

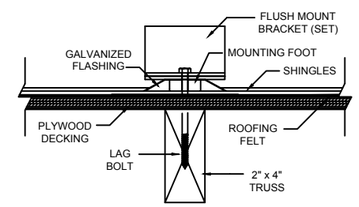

02 SECTION DETAIL - LAG BOLT ATTACHMENT
USING MANUFACTURERS HARDWARE FOR PARALLEL MOUNT ON SLOPING ROOFS

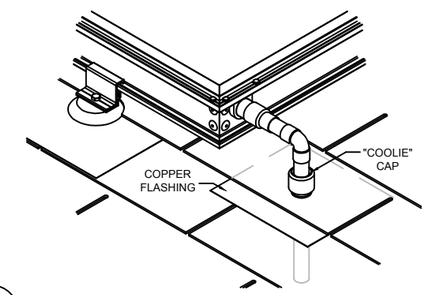

06 DETAIL - PIPE FLASHING
USING MANUFACTURERS HARDWARE FOR PARALLEL MOUNT ON SLOPING ROOFS

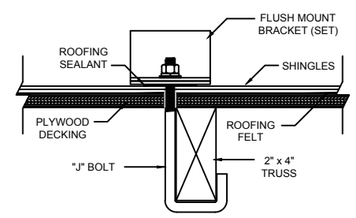

03 SECTION DETAIL - "J" BOLT ATTACHMENT
USING MANUFACTURERS HARDWARE FOR PARALLEL MOUNT ON SLOPING ROOFS

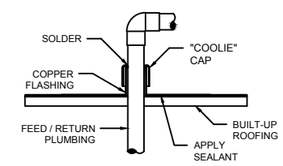

APPLY ROOFING SEALANT TO THE UNDERSIDE OF
THE FLASHING BASE PRIOR TO INSTALLATION

07 SECTION DETAIL - COPPER ROOF FLASHING
USING MANUFACTURERS FLASHINGS FOR PIPE CONNECTIONS ON SLOPING ROOFS

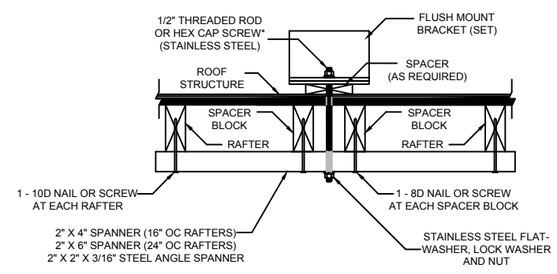

04 SECTION DETAIL - SPANNER ATTACHMENT
USING MANUFACTURERS HARDWARE FOR PARALLEL MOUNT ON SLOPING ROOFS

LAG BOLTS ARE TO BE 3/8" DIAMETER x 5" LONG AND MUST PENETRATE THE RAFTER MEMBER A MINIMUM OF 2-1/2". PILOT HOLES SHOULD BE DRILLED INTO THE CENTERLINE OF THE RAFTER AND SHOULD BE BETWEEN 50-75% OF THE BOLT DIAMETER (9/32" RECOMMENDED).

"J" BOLTS ARE TO BE 3/8" DIAMETER AND MUST POSITIONED DIRECTLY BESIDE THE RAFTER. SNUG THE "J" BOLT AGAINST THE RAFTER BEFORE TIGHTENING THE NUT. USE NYLOCK NUTS OR LOCK WASHERS TO SECURELY FASTEN THE MOUNTING BRACKET TO THE "J" BOLT.

SPANNER BOLTS TO BE 1/2" DIAMETER, STAINLESS STEEL. WHERE HEX CAP SCREWS ARE USED IN PLACE OF THREADED ROD, THE SCREW LENGTH VARIES WITH THE ROOF CONSTRUCTION AND SPANNER MEMBER USED. SPACER BLOCKS SHALL BE INSTALLED WITHIN 1" OF THE THRU-BOLT. WHEN THRU-BOLT IS WITHIN 2" OF A RAFTER, ONLY ONE SPACER BLOCK WILL BE REQUIRED ON THE OPPOSITE SIDE OF THE BOLT, AWAY FROM THE RAFTER. TWO SPACER BLOCKS ARE REQUIRED WHEN THE BOLT IS MORE THAN 2" FROM THE RAFTER.

WHEN THE MOUNTING PROVISIONS OF ADJACENT COLLECTORS ARE INSTALLED SIDE BY SIDE AND THE THRU-BOLTS ARE 1 1/2" OR MORE APART, IT WILL BE NECESSARY TO HAVE AT LEAST ONE SPACER BLOCK (OR RAFTER) BETWEEN BOLTS.

APPLY A LIBERAL AMOUNT OF ROOF SEALANT OR A SEALANT PAD AROUND THE OPENING PRIOR TO SECURING THE MOUNTING BRACKET. SEALANT IS REQUIRED BETWEEN MOUNTING BLOCK AND SHINGLES/SHEATHING. BOLT HOLES SHALL BE SEALED TO PREVENT MOISTURE PENETRATION.

ALL CONNECTION HARDWARE (BOLTS & WASHERS) TO BE STAINLESS STEEL.

THESE DETAILS ARE SPECIFIED BY THE DESIGN ARCHITECT OR ENGINEER.

ALTERNATE ENERGY TECHNOLOGIES, LLC.
1345 ENERGY COVE COURT - GREEN COVE SPRINGS, FLORIDA 32043

N O T I C E S:
The thoughts and ideas expressed here within are exclusive property of Alternate Energy Technologies, LLC. The use of these materials, without the written consent of AET, is not permitted.

ROOF PLAN MOUNTING ATTACHMENTS

DRAWING TITLE:
SOLAR DOMESTIC HOT WATER

REVISIONS:

SEAL:

DATE:
DRAWN:
SCALE:
SHEET: 2 of 21

ST02

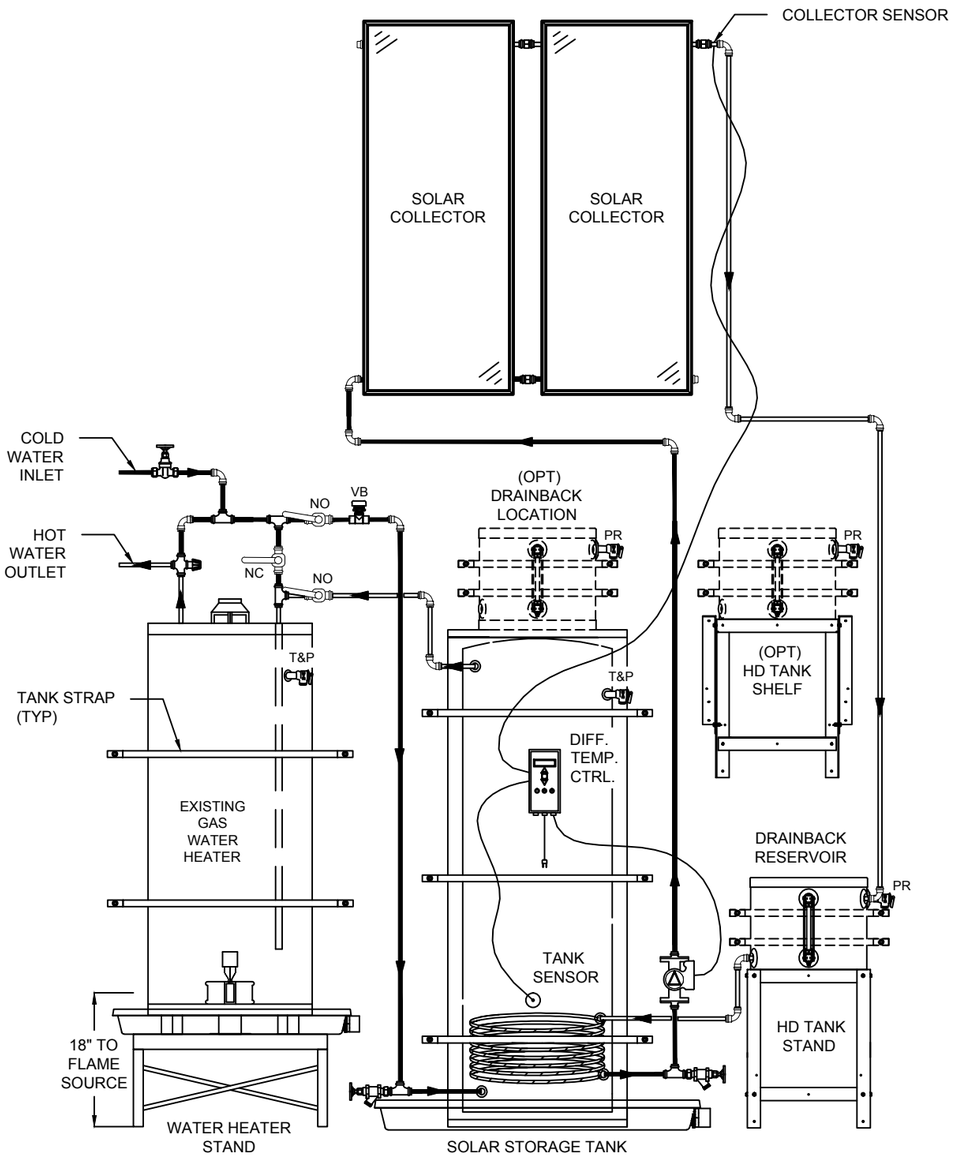

FLAT PLATE SOLAR COLLECTORS

TAG	MANUFACTURER	MODEL	COLLECTOR DIMENSIONS	GROSS AREA SQ. FT.	NET APERTURE SQ. FT.	DRY WEIGHT LBS.	FLUID CAPACITY U.S. GALLONS	DESIGN FLOW RATE – GPM	DESIGN PRESSURE DROP @ DESIGN FLOW RATE – PSIG	MAX. FLOW RATE – GPM	MAX. OPERATING PRESSURE – PSIG	STD. HEADER WIDTH – INCHES	STD. HEADER DIA. – INCHES	HEADER CENTER TO CENTER – INCHES
A	AET SOLAR, LLC.	MSC–32	47–15/16"W x 98–1/8"L x 3–3/16"D	32.67	29.67	116	1.00	1.25	0.044	12	160	50"	1"	94.625"
B	AET SOLAR, LLC.	MSC–20	47–15/16"W x 62–1/8"L x 3–3/16"D	20.68	18.43	79	0.6	0.76	0.027	12	160	50"	1"	

NOTE 1. INSTALL COLLECTORS PER MANUFACTURERS RECOMMENDATIONS. INSTALLING CONTRACTOR IS RESPONSIBLE FOR ANGLE STANDS, ROOF ANCHORING FOR PANELS, AND ANCHORING. COLLECTORS ARE TO BE SRCC RATED.

SOLAR STORAGE / TRANSFER TANK(S)

TAG	LOCATION	MANUFACTURER	MODEL	STORAGE CAPACITY	HEIGHT	DIAMETER	SHIPPING WEIGHT	REMARKS
DB–1	GARAGE/UTILITY RM	AET SOLAR, LLC.	DB–10	10 GALLONS	21¾"	18"	30 LBS	N/A
A	GARAGE/UTILITY RM	AET SOLAR, LLC.	TMSS–80	80 GALLONS	72"	23"	146 LBS	INCLUDES INTERNAL, SINGLE–WALL HEAT EXCHANGER
B	GARAGE/UTILITY RM	AET SOLAR, LLC.	TMSS–60	60 GALLONS	52"	23"	115 LBS	INCLUDES INTERNAL, SINGLE–WALL HEAT EXCHANGER

MAY BE OUTSIDE, MOUNTED IN AN APPROVED ENCLOSURE FOR CLIMATE ZONES 6-9

CIRCULATING PUMP SCHEDULE

PUMP NO.	AREA OR SYSTEM SERVED	LOCATION	MFR.	MODEL NO. SIZE	GPH	HEAD FT.	SUCTION / DISCHARGE SIZE	HP	WATTS	VOLT / PHASE	REMARKS
P–1	DOMESTIC SOLAR STORAGE LOOP	GARAGE/UTILITY RM	GRUNDFOS	UP 15–100F	00	00	1"	1/25	135	115 / 1	CAST IRON W/ SS VOLUTE

MAY BE OUTSIDE, MOUNTED IN AN APPROVED ENCLOSURE FOR CLIMATE ZONES 6-9

CONTROLS

TAG	AREA OR SYSTEM SERVED	LOCATION	MFR.	MODEL NO. SIZE	VOLTS	HZ	REMARKS
DTC–1	DOMESTIC SOLAR STORAGE LOOP	GARAGE/UTILITY RM	AET	DTC–ES–1	120	60	DIFFERENTIAL TEMPERATURE CONTROL W/ 10K THERMISTOR SENSORS

MAY BE OUTSIDE, MOUNTED IN AN APPROVED ENCLOSURE FOR CLIMATE ZONES 6-9

MISCELLANEOUS VALVES

TAG	LOCATION	MANUFACTURER	MODEL	SIZE CONNECTION	REMARKS
V–1	GARAGE/UTILITY RM	WATTS	LF1170–UT–M2	3/4" THREADED	LEAD–FREE CAST COPPER SILICON ALLOY BODY CONSTRUCTION
V–2	GARAGE/UTILITY RM	WEBSTONE	51703W	3/4" SWEAT	FULL PORT FORGED BRASS BALL VALVE W/ ADJUSTABLE PACKING GLAND

MAY BE OUTSIDE, MOUNTED IN AN APPROVED ENCLOSURE FOR CLIMATE ZONES 6-9

LEGEND

	VARIABLE SPEED PUMP WITH FLANGES AND ISOLATION VALVES		UNION
			PIPE CAP
			GATE VALVE
	BALL VALVE		HOT WATER
	BOILER DRAIN (VALVE)		COLD WATER
	MIXING VALVE		PIPE TEE
	PIPE ELBOW	T&P	TEMP/ PRESS RELIEF VALVE
VB	VACUUM BREAKER	PR	PRESS RELIEF VALVE

NOTE:

1: TEMPERATURE AND PRESSURE RELIEF VALVES NEED TO BE PLUMBED TO 6" FROM DRAIN PAN. WITH NO THREAD ON END OF PIPE TO AVOID FROM BEING CAPPED.

2: DRAINBACK HAS THREE MOUNTING OPTIONS, FLOOR TANK STAND, WALL TANK MOUNT, AND ATOP OF SOLAR STORAGE TANK. DRAINBACK FLOOR AND WALL MOUNT TANK STAND PROVIDED BY ALTERNATE ENERGY TECHNOLOGIES LLC.

3: ONE STRAP FOR DRAINBACK TANK FOR WALL MOUNT AND FLOOR STAND AND TWO STRAPS FOR DRAINBACK ATOP OF SOLAR STORAGE TANK.

ALTERNATE ENERGY TECHNOLOGIES, LLC.
1345 ENERGY COVE COURT - GREEN COVE SPRINGS, FLORIDA 32043

NOTICES:
The thoughts and ideas expressed here within are the exclusive property of Alternate Energy Technologies, LLC. The use of these materials, without the written consent of AET, is not permitted.

SYSTEM DIAGRAM COMPONENT SCHEDULES

DRAWING TITLE: SOLAR DOMESTIC HOT WATER

REVISIONS:

SEAL:

DATE:
DRAWN:
SCALE:
SHEET: 3 of 21

ST03

Wind Load Analysis

Design Conditions

Geographical Location (address)	ACCES Residence Merced, CA	
Latitude	37.30	° N
Longitude	120.48	°W
Selected Solar Collector	MSC-32	
Mounting Orientation	Vertical	
Collector Width	47.9375	in
Collector Length	98.125	in
Effective Wind Area	20	ft²
Number of collectors	2	
Collector Area *(each)*	32.67	ft²
Collector Weight *(each)*	116.0	lbs

Design Procedures

The procedure below follows the Minimum Design Loads for Buildings and Other Structures as specified in ASCE/SEI 7-10, Chapter 30, Table 30.5-1, Components and Cladding - Method 1

Index No.

Table 1.5-1 **Risk Category of Structure** = II

Figure 26.5-1A **Basic Wind Speed, *V*** V = 110 mph

Section 26.7.2 **Exposure Category** = C
Open terrain

Section 26.8.2 **Topographic Factor, K_{zt}** K_{zt} = 1.0

Figure 30.5-1 **Net Design Wind Pressure, P_{net30} (psf)** *(Exposure B at h = 30 ft.)*

Zone	Effective wind area (sf)	Basic Wind Speed 110 mph					
		Roof 0° to 7°		Roof >7° to 27°		Roof >27° to 45°	
1	20	8.3	-21.2	11.4	-19.4	19.4	-20.7
2	20	8.3	-32.6	11.4	-31.9	19.4	-24.3
3	20	8.3	-45.5	11.4	-47.9	19.4	-24.3

Figure 30.5-1 **Adjust Factor of Building Height and Exposure** λ = 1.21
Exposure C at h = 12 ft

Figure 30.5-1 **Adjusted Wind Pressures,** $W = \lambda K_{zt} P_{net30}$

Zone	Effective wind area (sf)	Basic Wind Speed 110 mph					
		Roof 0° to 7°		Roof >7° to 27°		Roof >27° to 45°	
1	20	16.0	-25.7	16.0	-23.5	23.5	-25.0
2	20	16.0	-39.4	16.0	-38.6	23.5	-29.4
3	20	16.0	-55.1	16.0	-58.0	23.5	-29.4

Section 2.4.1 **Combining Nominal Loads using Allowable Stress Design (ASD)**

Zone	Effective wind area (sf)	Basic Wind Speed 110 mph					
		Roof 0° to 7°		Roof >7° to 27°		Roof >27° to 45°	
1	20	16.0	-16.0	16.0	-16.0	17.8	-16.0
2	20	16.0	-21.4	16.0	-20.9	17.8	-16.0
3	20	16.0	-30.8	16.0	-32.6	17.8	-16.0

The final value, including all permitted reductions, used in the design shall not be less than that required by Section 30.2.2 (16 psf)

Seismic Design Criteria

Design Procedures

The procedure below follows the Minimum Design Loads for Buildings and Other Structures as specified in ASCE/SEI 7-10, Chapter 13, Seismic Design Requirements for Nonstructural Components

Index No.

Section 13.3.1 **Seismic Design Force** *(horizontal)* F_{ph} = 54.1 lbs
$F_p = [(0.4 \cdot a_p \cdot S_{DS} \cdot W_p)/(R_p/I_p)] \cdot (1+2 \cdot z/h)$
not to exceed $1.6 \cdot S_{DS} \cdot I_p \cdot W_p$ *108.2*
not less than $0.3 \cdot S_{DS} \cdot I_p \cdot W_p$ *20.3*

Section 11.4.4 **Design Spectral Acceleration Parameters at Short Periods** S_{DS} = 0.554 g
from USGS Design Maps Summary Report

Section 11.4.3 **Design Spectral Acceleration Parameters at Short Periods** S_{MS} = 0.831 g
$S_{MS} = F_a \cdot S_s$

Section 11.4.1 **Short Period Site Coefficient** F_a = 1.3

Section 11.4.3 **Mapped MCE_R Spectral Response Acceleration Parameter at Short Periods** S_S = 0.648 g
from USGS Design Maps Summary Report

Section 11.5.1 **Component Amplification Factor** a_p = 1.0
taken from International Code Council (ICC) Acceptance Criteria (AC) 428, Sect. 3.1.3.3

Section 1.5-2 **Seismic Importance Factor** I_p = 1.0
not required to function for life-safety purposes

Section 13.3.1 **Component Operating Weight** W_p = 122 lbs
based on fluid filled MSC-32 on std mount set

Section 11.5.1 **Component Response Modification Factor** R_p = 1.5
taken from International Code Council (ICC) Acceptance Criteria (AC) 428, Sect. 3.1.3.3

Section 13.3.1 **Structure Attachment Point Height** z = 13 ft
with respect to base
items at or below the base = 0

Section 13.3.1 **Structure Average Roof Height** h = 12 ft
with respect to base
The value z/h need not exceed 1.0

Section 13.3.1 **Vertical Seismic Load Effect** F_{pv} = 1.4 lbs
$F_p = 0.2 \cdot S_{DS} \cdot W_p$

Seismic Load on the Solar Collector (horz) E_h = 2.70 psf
$E_h = F_{ph} / A_{eff}$

Seismic Load on the Solar Collector (vert) E_v = 0.07 psf
$E_v = F_{pv} / A_{eff}$

ALTERNATE ENERGY TECHNOLOGIES, LLC.
1345 ENERGY COVE COURT - GREEN COVE SPRINGS, FLORIDA 32043

NOTICES:
The thoughts and ideas expressed here within are the exclusive property of Alternate Energy Technologies, LLC. The use of these materials, without the written consent of AET, is not permitted.

WIND / SEISMIC CALCULATIONS

DRAWING TITLE:
SOLAR DOMESTIC HOT WATER

REVISIONS:

SEAL:

DATE:
DRAWN:
SCALE:
SHEET: 4 of 21

ST04 A

Wind Load Analysis

Design Conditions

Geographical Location (address)	ACCES Residence Merced, CA	
Latitude	37.30	° N
Longitude	120.48	°W
Selected Solar Collector	MSC-20	
Mounting Orientation	Vertical	
Collector Width	47.95	in
Collector Length	62.13	in
Effective Wind Area	13	ft²
Number of collectors	2	
Collector Area *(each)*	20.69	ft²
Collector Weight *(each)*	116.0	lbs

Design Procedures

The procedure below follows the Minimum Design Loads for Buildings and Other Structures as specified in ASCE/SEI 7-10, Chapter 30, Table 30.5-1, Components and Cladding - Method 1

Index No.

Table 1.5-1 **Risk Category of Structure** = II

Figure 26.5-1A **Basic Wind Speed, *V*** V = 110 mph

Section 26.7.2 **Exposure Category** = C
Open terrain

Section 26.8.2 **Topographic Factor, K_{zt}** K_{zt} = 1.0

Figure 30.5-1 **Net Design Wind Pressure, P_{net30} (psf)** *(Exposure B at h = 30 ft.)*

Zone	Effective wind area (sf)	Basic Wind Speed 110 mph					
		Roof 0° to 7°		Roof >7° to 27°		Roof >27° to 45°	
1	13	8.7	-21.6	12.2	-19.8	19.8	-21.5
2	13	8.7	-35.5	12.2	-34.0	19.8	-25.2
3	13	8.7	-52.5	12.2	-50.4	19.8	-25.2

Figure 30.5-1 **Adjust Factor of Building Height and Exposure** λ = 1.21
Exposure C at h = 12 ft

Figure 30.5-1 **Adjusted Wind Pressures,** $W = \lambda K_{zt} P_{net30}$

Zone	Effective wind area (sf)	Basic Wind Speed 110 mph					
		Roof 0° to 7°		Roof >7° to 27°		Roof >27° to 45°	
1	13	16.0	-26.2	16.0	-23.9	23.9	-26.0
2	13	16.0	-42.9	16.0	-41.1	23.9	-30.5
3	13	16.0	-63.5	16.0	-61.0	23.9	-30.5

Section 2.4.1 **Combining Nominal Loads using Allowable Stress Design (ASD)**

Zone	Effective wind area (sf)	Basic Wind Speed 110 mph					
		Roof 0° to 7°		Roof >7° to 27°		Roof >27° to 45°	
1	13	16.0	-16.0	16.0	-16.0	20.2	-16.0
2	13	16.0	-22.2	16.0	-21.1	20.2	-16.0
3	13	16.0	-34.6	16.0	-33.1	20.2	-16.0

The final value, including all permitted reductions, used in the design shall not be less than that required by Section 30.2.2 (16 psf)

Seismic Design Criteria

Design Procedures

The procedure below follows the Minimum Design Loads for Buildings and Other Structures as specified in ASCE/SEI 7-10, Chapter 13, Seismic Design Requirements for Nonstructural Components

Index No.

Section 13.3.1 **Seismic Design Force** *(horizontal)* F_{ph} = 54.1 lbs
$F_p = [(0.4 \cdot a_p \cdot S_{DS} \cdot W_p)/(R_p/I_p)] \cdot (1+2 \cdot z/h)$
not to exceed $1.6 \cdot S_{DS} \cdot I_p \cdot W_p$ *108.2*
not less than $0.3 \cdot S_{DS} \cdot I_p \cdot W_p$ *20.3*

Section 11.4.4 **Design Spectral Acceleration Parameters at Short Periods** S_{DS} = 0.554 g
from USGS Design Maps Summary Report

Section 11.4.3 **Design Spectral Acceleration Parameters at Short Periods** S_{MS} = 0.831 g
$S_{MS} = F_a \cdot S_s$

Section 11.4.1 **Short Period Site Coefficient** F_a = 1.3

Section 11.4.3 **Mapped MCE_R Spectral Response Acceleration Parameter at Short Periods** S_S = 0.648 g
from USGS Design Maps Summary Report

Section 11.5.1 **Component Amplification Factor** a_p = 1.0
taken from International Code Council (ICC) Acceptance Criteria (AC) 428, Sect. 3.1.3.3

Section 1.5-2 **Seismic Importance Factor** I_p = 1.0
not required to function for life-safety purposes

Section 13.3.1 **Component Operating Weight** W_p = 122 lbs
based on fluid filled MSC-32 on std mount set

Section 11.5.1 **Component Response Modification Factor** R_p = 1.5
taken from International Code Council (ICC) Acceptance Criteria (AC) 428, Sect. 3.1.3.3

Section 13.3.1 **Structure Attachment Point Height** z = 13 ft
with respect to base
items at or below the base = 0

Section 13.3.1 **Structure Average Roof Height** h = 12 ft
with respect to base
The value z/h need not exceed 1.0

Section 13.3.1 **Vertical Seismic Load Effect** F_{pv} = 1.4 lbs
$F_p = 0.2 \cdot S_{DS} \cdot W_p$

Seismic Load on the Solar Collector (horz) E_h = 2.70 psf
$E_h = F_{ph} / A_{eff}$

Seismic Load on the Solar Collector (vert) E_v = 0.07 psf
$E_v = F_{pv} / A_{eff}$

ALTERNATE ENERGY TECHNOLOGIES, LLC.
1345 ENERGY COVE COURT - GREEN COVE SPRINGS, FLORIDA 32043

NOTICES:
The thoughts and ideas expressed here within are the exclusive property of Alternate Energy Technologies, LLC. The use of these materials, without the written consent of AET, is not permitted.

WIND / SEISMIC CALCULATIONS

DRAWING TITLE:
SOLAR DOMESTIC HOT WATER

REVISIONS:

SEAL:

DATE:
DRAWN:
SCALE:
SHEET: 4 of 21

ST04 B

STRUCTURAL CRITERIA FOR RESIDENTIAL FLUSH-MOUNTED SOLAR ARRAYS

1. ROOF CHECKS

A. Visual Review/Contractor's Site Audit of Existing Conditions:
1) Is the roof a single roof without a reroof overlay? Y / N
2) Does the roof structure appear structurally sound, without signs of alterations or significant structural deterioration or sagging, as illustrated in Figure 1? Y / N

B. Roof Structure Data:
1) Measured roof slope (e.g. 6:12): _____ :12
2) Measured rafter spacing (center-to-center): _____ inch
3) Type of roof framing (rafter or manufactured truss): Rafter / Truss

2. SOLAR ARRAY CHECKS

A. Flush-mounted Solar Array:
1) Is the plane of the modules (panels) parallel to the plane of the roof? Y / N
2) Is there a 2" to 10" gap between underside of module and the roof surface? Y / N
3) Modules do not overhang any roof edges (ridges, hips, gable ends, eaves)? Y / N

B. Do the modules plus support components weigh no more than:
4 psf for photovoltaic arrays or 5 psf for solar thermal arrays? (collectors are 3.8 psf wet) Y / N

C. Does the array cover no more than half of the total roof area (all roof planes)? Y / N

D. Are solar support component manufacturer's project-specific completed worksheets, tables with relevant cells circled, or web-based calculator results attached? Y / N

E. Is a roof plan of the module and anchor layout attached? (see Figure 2) Y / N

F. Downward Load Check (Anchor Layout Check):
1) Proposed anchor horizontal spacing: _____'-____" ft-in
2) Horizontal anchor spacing per Table 1: _____'-____" ft-in
3) Is proposed anchor horizontal spacing equal to or less than Table 1 spacing? Y / N

G. Wind Uplift Check (Anchor Fastener Check):
1) Anchor fastener data (see Sheet ST02 - 02, 03, or 05):
a. Diameter of lag screw, hanger bolt or self-drilling screw: _____ inch
b. Embedment depth of rafter: _____ inch
c, Number of screws per anchor (typically one): _____
d. Are 5/16" diameter lag screws with 2.5" embedment into the rafter (min) used, OR does the anchor fastener meet the manufacturer's guidelines? Y / N

3. SUMMARY

A. All items above are checked YES. No additional calculations are required.
B. One or more items are checked NO. Attach project-specific drawings and calculations stamped and signed by a California-licensed civil or structural engineer.

Job Address: _____ Permit #: _____
Contractor/Installer: _____ License # & Class: _____
Signature: _____ Date: _____ Phone #: _____

Optional Additional Rafter Span Check Criteria
[At option of CBO, insert rows (4) to (7) below into table above after row 1.B.(3)]

1. ROOF CHECKS

B. Roof Structure Data:
4) Measured rafter size (e.g. 1½ x 3½, not 2x4): _____ x ____ inch
5) Measured rafter horizontal span (see Figure 4): _____'-____" ft-in
6) Horizontal rafter span per Table 2: _____'-____" ft-in
7) Is measured horizontal rafter span less than Table 2 span (see next page)? Y / N / Truss

Figure 1. Roof Visual Structural Review (Contractor's Site Audit) of Existing Conditions

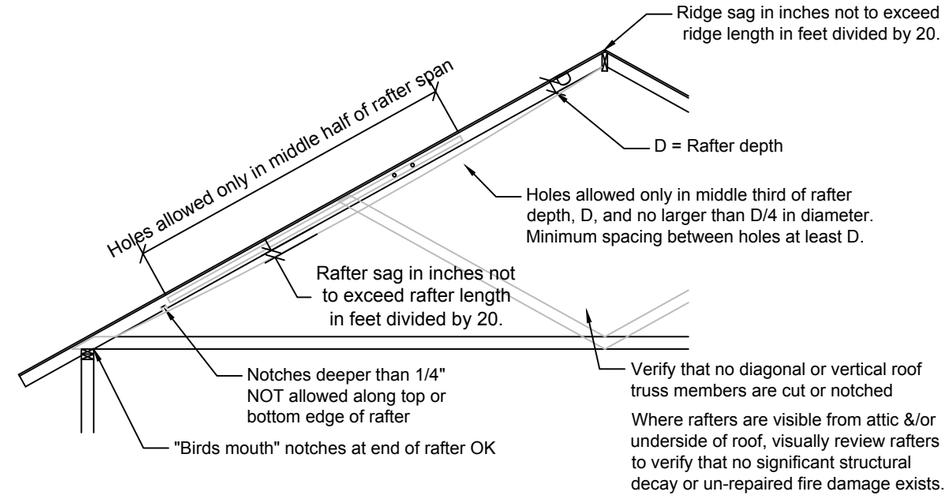

The site auditor should verify the following.
1. No visually apparent disallowed rafter holes, notches and truss modifications as shown above.
2. No visually apparent structural decay or unrepaired fire damage.
3. Roof sag, measured in inches, is not more than the rafter or ridge beam length in feet divided by 20.

Rafters that fail the above criteria should not be used to support solar arrays unless they are first strengthened.

Figure 2. Sample Solar Collector Array and Anchor Layout Diagram (Roof plan)

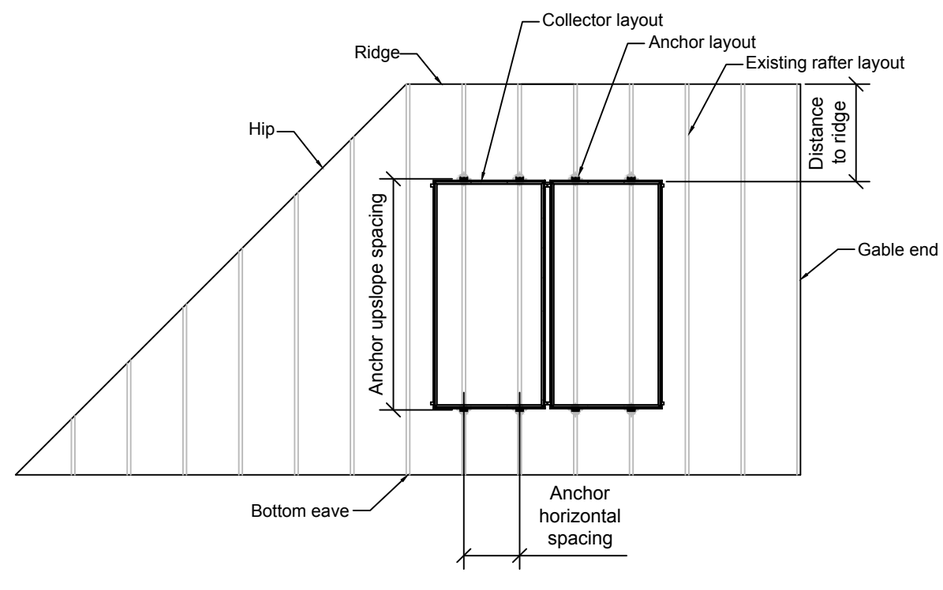

ALTERNATE ENERGY TECHNOLOGIES, LLC.
1345 ENERGY COVE COURT - GREEN COVE SPRINGS, FLORIDA 32043

NOTICES:
The thoughts and ideas expressed here within are the exclusive property of Alternate Energy Technologies, LLC. The use of these materials, without the written consent of AET, is not permitted.

STRUCTURAL CRITERIA AND REVIEW

DRAWING TITLE: SOLAR DOMESTIC HOT WATER

REVISIONS:

SEAL:

DATE:
DRAWN:
SCALE:
SHEET: 5 of 21

ST05

Table 1. Maximum Horizontal Anchor Spacing				
Roof Slope		Rafter Spacing		
		16" o.c.	24" o.c.	32" o.c.
Solar Thermal Arrays (5 psf max)				
Flat to 6:12	0° to 26°	4'-0"	4'-0"	5'-4"
7:12 to 13:12	27° to 45°	1'-4"	2'-0"	2'-8"
13:12 to 24:12	46° to 63°	Calc. Req'd	Calc. Req'd	Calc. Req'd

Solar support component manufacturer's guidelines may be relied upon to ensure the array above the roof is properly designed, but manufacturer's guidelines typically do NOT check to ensure that the roof itself can support the concentrated loads from the solar array. Table 1 assumes that the roof complied with the building code in effect at the time of construction, and places limits on anchor horizontal spacing to ensure that a roof structure is not overloaded under either downward loads or wind uplift loads. Note 4 below lists the basic assumptions upon which this table is based.

Table 1 Notes:

1. Anchors are also known as "stand-offs," "feet," "mounts" or "points of attachment." Horizontal anchor spacing is also known as "cross-slope" or "east-west" anchor spacing (see Figure 2).
2. If anchors are staggered from row-to-row going up the roof, the anchor spacing may be twice that shown above, but no greater than 6'-0".
3. For manufactured plated wood trusses at slopes of flat to 6:12, the horizontal anchor spacing shall not exceed 4'-0" and anchors in adjacent rows shall be staggered.
4. This table is based on the following assumptions:
   - The roof structure conformed to building code requirements at the time it was built.
   - The attached list of criteria is met.
   - Mean roof height is not greater than 40 feet.
   - Roof sheathing is at least 7/16" thick oriented strand board or plywood. 1x skip sheathing is acceptable.
   - If the dwelling is in Wind Exposure B (typical urban, suburban or wooded areas farther than 500 yards from large open fields), no more than one of the following conditions apply:
     - The dwelling is located in a Special Wind Region with design wind speed between 115 and 130 mph per ASCE 7-10.
     - The dwelling is located on the top half of a tall hill, provided average slope is less than 15%.
   - If the dwelling is in Wind Exposure C (within 500 yards of large open fields or grasslands), all of the following conditions apply.
     - Design wind speed is 110 mph or less (not in a Special Wind Region).
     - The dwelling is not located on the top half of a tall hill.
   - The solar array displaces roof live loads (temporary construction loads) that the roof was originally designed to carry.
   - The Structural Technical Appendix provides additional information about analysis assumptions.

Table 2. Roof Rafter Maximum Horizontal Span (feet-inches)1								
Assumed Vintage	Nominal Size	Actual Size	Non-Tile Roof²			Tile Roof³		
			Rafter Spacing					
			16" o.c.	24" o.c.	32" o.c.	16" o.c.	24" o.c.	32" o.c.
Post-1960	2x4	1½" x 3½"	9'-10"	8'-0"	6'-6"	8'-6"	6'-11"	5'-6"
	2x6	1½" x 5½"	14'-4"	11'-9"	9'-6"	12'-5"	10'-2"	8'-0"
	2x8	1½" x 7¼"	18'-2"	14'-10"	12'-0"	15'-9"	12'-10"	10'-3"
Pre-1960	2x4	1¾" x 3¾"	11'-3"	9'-9"	7'-9"	10'-3"	8'-6"	6'-9"
	2x6	1¾" x 5¾"	17'-0"	14'-0"	11'-3"	14'-9"	12'-0"	9'-9"
	2x8	1¾" x 7¾"	22'-3"	18'-0"	14'-6"	19'-0"	15'-6"	12'-6"

Note to contractor; highlight vintage and size as applicable.

Beyond a visual review by the contractor checking for unusual sagging or deterioration, some CBOs may want additional assurance that the roof structure complies with structural building code requirements. Table 2 is an optional table some CBOs may elect to use to provide additional assurance by requiring a check of existing roof rafter spans, and supports optional criteria 1.B.5 and 1.B.6. For post-1960 construction, these span tables match the rafter span tables found in the 2013 California Building and Residential codes. For pre-1960 construction, the rafter span tables are based on structural calculations with lumber sizes and wood species and grade appropriate for older construction. Note 5 below lists the basic assumptions upon which this table is based.

Table 2 Notes:

1. See Figure 4 for definition of roof rafter maximum horizontal span.
2. "Non-tile Roof " = asphalt shingle, wood shingle and wood shake, with an assumed roof assembly weight of 10 psf.
3. "Tile Roof " = clay tile or cement tile, with an assumed roof assembly weight of 20 psf
4. Unaltered manufactured plated-wood trusses may be assumed to be code compliant and meet intent of Table 2.
5. This table is based on the following assumptions:
   - Span/deflection ratio is equal to or greater than 180.
   - For post-1960 construction, wood species and grade is Douglas Fir-Larch No. 2.
   - For pre-1960 construction, wood species and grade is Douglas Fir-Larch No. 1.
   - Other wood species and/or grade are also acceptable if allowable bending stress is equal or greater to that listed.

Figure 3. Typical Anchor with Lag Screw Attachment

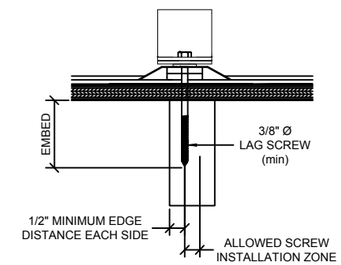

Table 3. Minimum Distance to Ridge "X" from Center of Collector Mount								
Roof Angle	Roof Pitch	Distance to Ridge, "X"	Roof Angle	Roof Pitch	Distance to Ridge, "X"	Roof Angle	Roof Pitch	Distance to Ridge, "X"
1	0.2 : 12	21'-8"	11	2.3 : 12	1'-10"	21	4.6 : 12	0'-11"
2	0.4 : 12	10'-9"	12	2.6 : 12	1'-8"	22	4.8 : 12	0'-10"
3	0.6 : 12	7'-2"	13	2.8 : 12	1'-6"	23	5.1 : 12	0'-9"
4	0.8 : 12	5'-4"	14	3.0 : 12	1'-5"	24	5.3 : 12	0'-9"
5	1.0 : 12	4'-3"	15	3.2 : 12	1'-4"	25	5.6 : 12	0'-8"
6	1.3 : 12	3'-6"	16	3.4 : 12	1'-3"	26	5.9 : 12	0'-8"
7	1.5 : 12	3'-0"	17	3.7 : 12	1'-2"	27	6.1 : 12	0'-8"
8	1.7 : 12	2'-7"	18	3.9 : 12	1'-1"	28	6.4 : 12	0'-7"
9	1.9 : 12	2'-4"	19	4.1 : 12	1'-0"	29	6.7 : 12	0'-7"
10	2.1 : 12	2'-1"	20	4.4 : 12	0'-11"			

Figure 4. Definition of Rafter Horizontal Span

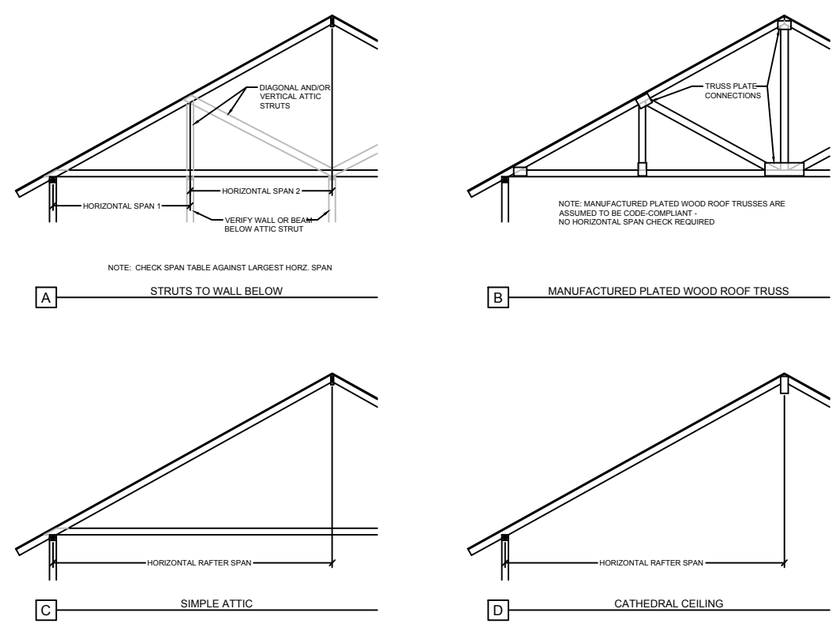

ALTERNATE ENERGY TECHNOLOGIES, LLC.
1345 ENERGY COVE COURT - GREEN COVE SPRINGS, FLORIDA 32043

NOTICES:
The thoughts and ideas expressed here within are the exclusive property of Alternate Energy Technologies, LLC. The use of these materials, without the written consent of AET, is not permitted.

ANCHOR LAYOUT DIAGRAM

DRAWING TITLE:
SOLAR DOMESTIC
HOT WATER

REVISIONS:

SEAL:

DATE:
DRAWN:
SCALE:
SHEET: 6 of 21

ST06

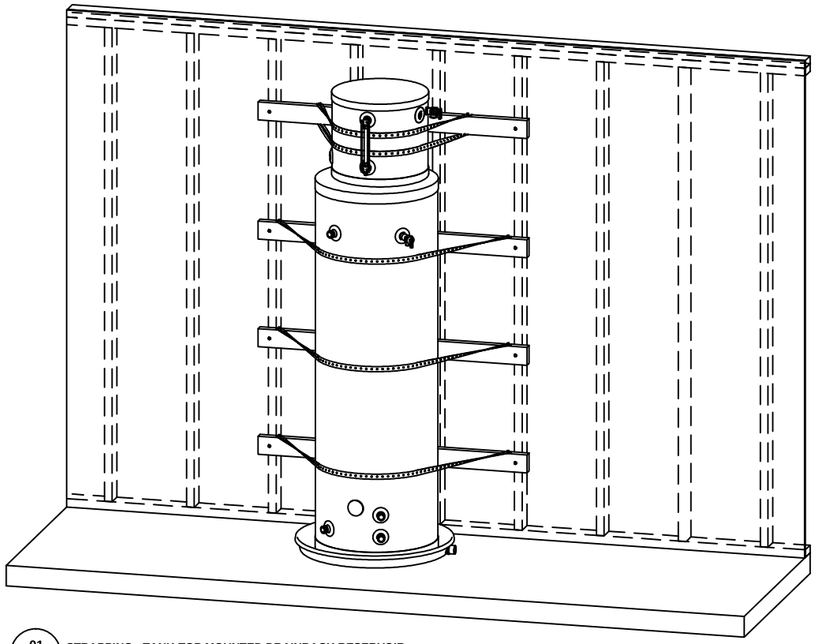

01 STRAPPING - TANK-TOP MOUNTED DRAINBACK RESERVOIR
FOR ILLUSTRATION PURPOSES ONLY – CONSULT LOCAL CODES FOR APPROVED METHODS AND MATERIALS

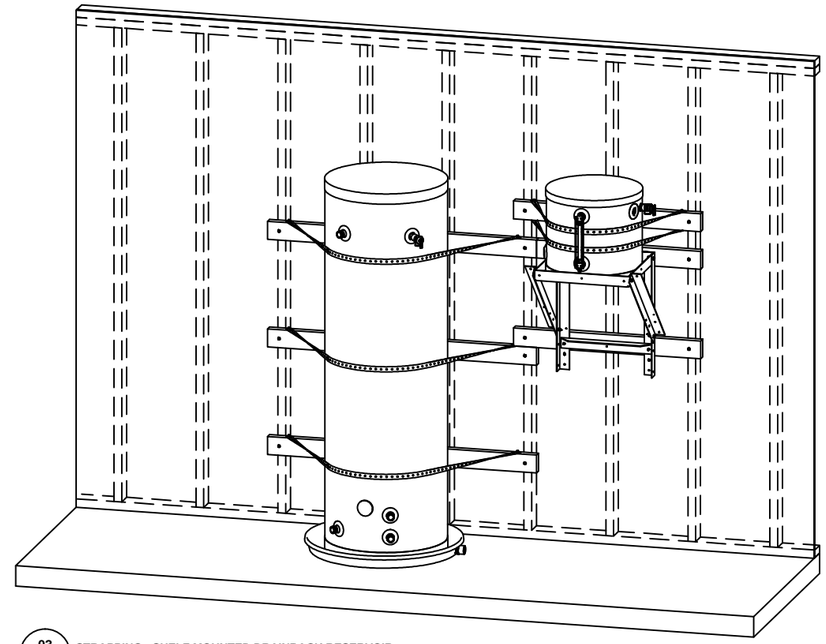

03 STRAPPING - SHELF MOUNTED DRAINBACK RESERVOIR
FOR ILLUSTRATION PURPOSES ONLY – CONSULT LOCAL CODES FOR APPROVED METHODS AND MATERIALS

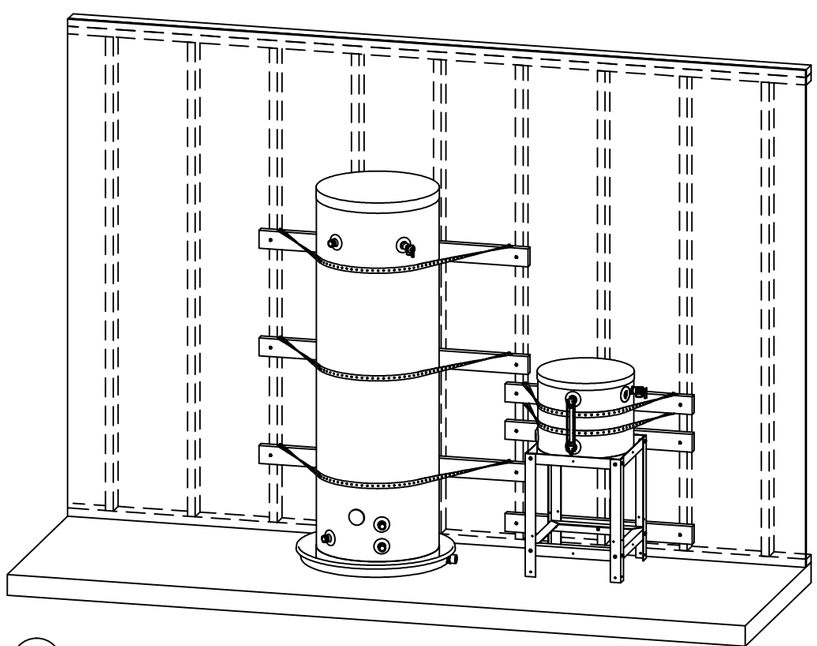

02 STRAPPING - STAND MOUNTED DRAINBACK RESERVOIR
FOR ILLUSTRATION PURPOSES ONLY – CONSULT LOCAL CODES FOR APPROVED METHODS AND MATERIALS

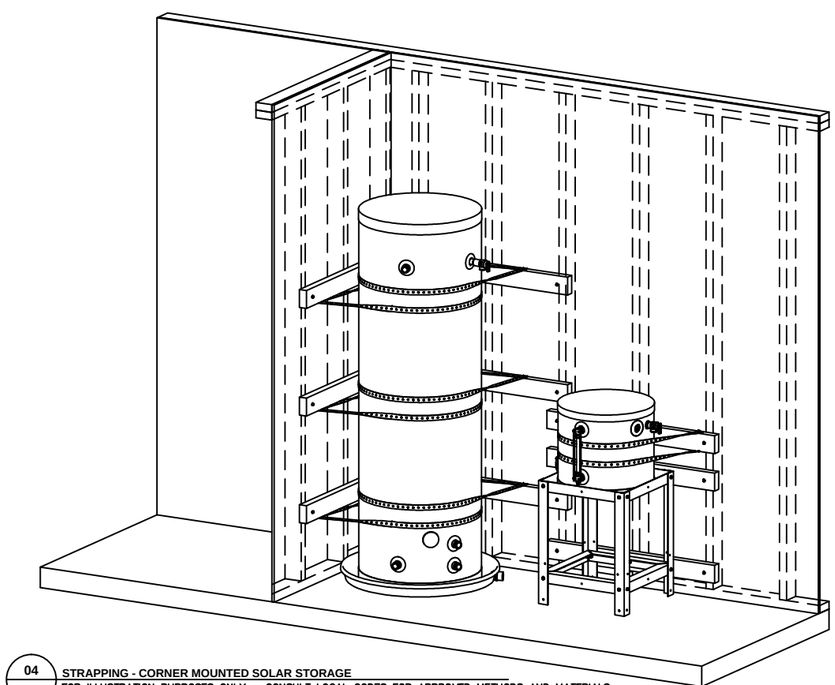

04 STRAPPING - CORNER MOUNTED SOLAR STORAGE
FOR ILLUSTRATION PURPOSES ONLY – CONSULT LOCAL CODES FOR APPROVED METHODS AND MATERIALS

ALTERNATE ENERGY TECHNOLOGIES, LLC.
1345 ENERGY COVE COURT - GREEN COVE SPRINGS, FLORIDA 32043

NOTICES:
The thoughts and ideas expressed here within are the exclusive property of Alternate Energy Technologies, LLC. The use of these materials, without the written consent of AET, is not permitted.

SEISMIC STRAPPING

DRAWING TITLE:
SOLAR DOMESTIC HOT WATER

REVISIONS:

SEAL:

DATE:
DRAWN:
SCALE:
SHEET: 7 of 21

ST07

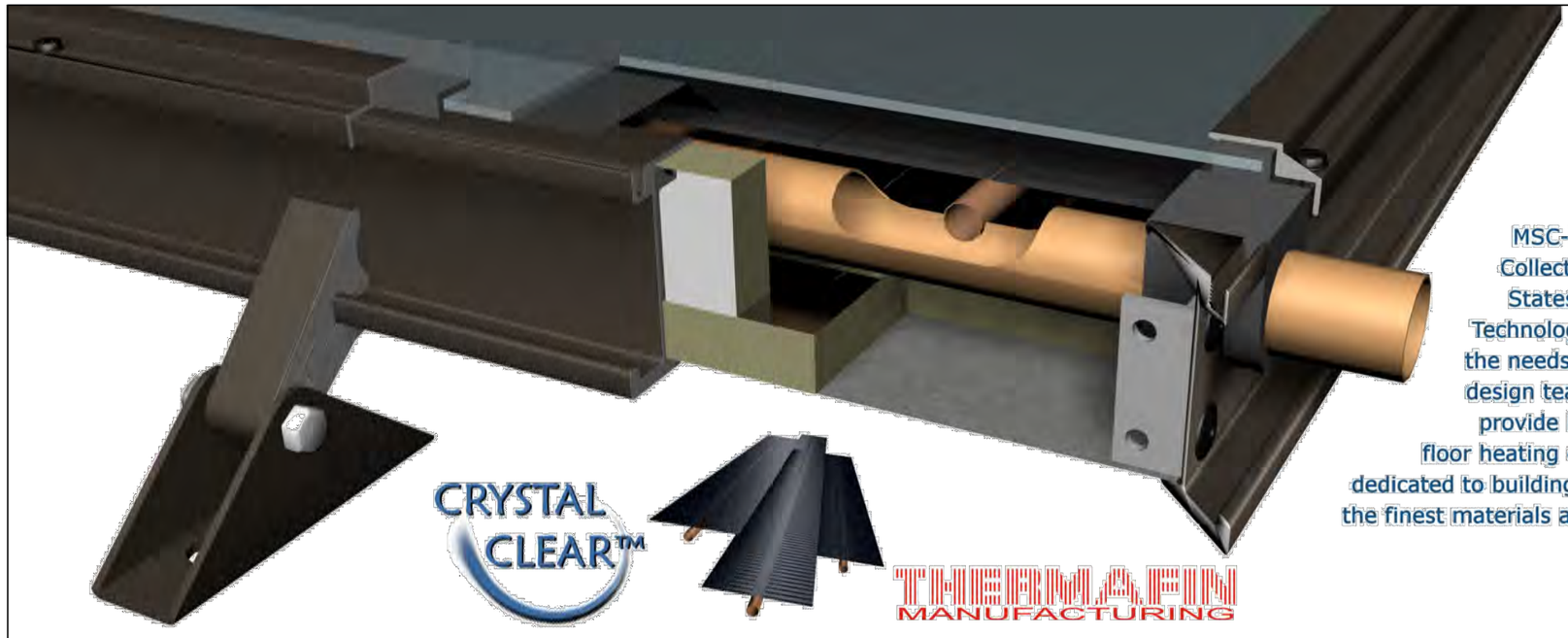

MSC-Series "Flat Plate" Solar Thermal Collectors, manufactured in The United States of America by Alternate Energy Technologies (AET), are designed to meet the needs of any solar system. Our expert design team will assist in sizing any job to provide hot water, space heating, radiant floor heating or industrial process heat. AET is dedicated to building our MSC-Series Collectors from the finest materials and with the highest standards of craftsmanship.

CRYSTAL CLEAR™

THERMAFIN MANUFACTURING

Crystal Clear™ Selective Coating
The Crystal Clear™ Solar Selective coating is technically a quartz encapsulated bimetallic alloy. Thousands of nanocrystalline growth projections dramatically increase the surface area of the absorber plate for maximum solar radiation absorption and performance. Crystal Clear™ has been tested for over 1450 hours at 617ºF continuously with minimal visible or physical degradation of its thermal characteristics. Furthermore, Crystal Clear™ by itself enhances the thermal performance of the absorbers by an additional 3%. The finished coating hosts an Absorptivity of ≥ 0.96 & Emissivity of ≤ 0.08.

THERMAFIN™ Absorbers
AET introduced THERMAFIN™ absorbers into the MSC-Series collectors in 1996. Through extensive research and development, we have employed the best heat tranfer method in the world today. THERMAFIN's high-frequency, forge weld process molecularly bonds the fin to the tube providing long-lasting performance and durability while allowing the highest heat conduction. The high-frequency welded joints will not weaken, expand, or pull apart and are backed by a written 30 year guarantee.

Anodized I-Beam Construction
Our MSC-Series collector frames are fabricated in our state-of-the-art manufacturing plant located in Jacksonville, Florida. Crafted using extruded aluminum, anodized architectural beam, and securely fastened with aircraft grade pin grip rivets, MSC- Series Collectors are built to withstand harsh saltwater environments.

COLLECTOR	MSC-20	MSC-24	MSC-26	MSC-28	MSC-32	MSC-40
Length (in)	62.126	98.125	78.125	86.125	98.125	122.125
Width (in)	47.950	35.875	47.875	47.875	47.875	47.875
Height (in)	3.125	3.125	3.125	3.125	3.125	3.125
Gross Area (ft²)	20.7	24.4	25.9	28.6	32.6	40.6
Fluid Capacity (gals)	0.60	0.76	0.90	0.96	1.05	1.22
Dry Weight (lbs)	47.95	87	91	102	116	151

All MSC-Series Collectors Feature:

- Wind load tested to allowable loads of 51 PSF.
- Crystal Clear™ selective coatings
- Extruded aluminum frame and battens
- Thermax™ polyisocyanurate foam insulation
- Aircraft aluminum pin grip rivets
- 30+ year design life
- 10 year warranty
- Proudly made in the U.S.A.
- THERMAFIN ™ absorber plates
- Quick-lock mounting hardware

ALTERNATE ENERGY TECHNOLOGIES, LLC.
1345 ENERGY COVE COURT - GREEN COVE SPRINGS, FLORIDA 32043

NOTICES:
The thoughts and ideas expressed here within are the exclusive property of Alternate Energy Technologies, LLC. Use of these materials, without the written consent of AET, is not permitted.

PRODUCT SPECIFICATIONS
SOLAR COLLECTORS

DRAWING TITLE:
SOLAR DOMESTIC HOT WATER

REVISIONS:

SEAL:

DATE:
DRAWN:
SCALE:
SHEET: 8 of 21

ST08

SPECIFICATION SHEET

DBS Thermomiser™ Storage Tank

- 316 Stainless Steel Tank construction .
- High output 304 Cupronickel submerged heat exchanger provides maximum efficiency to transfer energy from solar panels to hot water.
- Outer shell constructed of silver finished durable plastic for rust and impact resistance which prolongs tank life.
- Environmentally safe CFC free water blown, extra thick foam insulation allows less than ½ degree F per hour heat loss.
- Lead Free Compliant, as required by the Safe Drinking Water Act, Section 1417
-
- Temperature and pressure relief valve port, 1" MNPT stainless steel service ports
-
- Includes a pre-wired 10k thermistor sensor

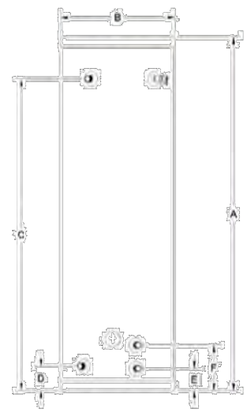

Description				Roughing-In Dimensions						
Model Number	Tank Size	Actual Capacity (gallons)	Upper Element (watts)	A Height (inches)	B Diameter (inches)	C Hot Out (inches)	D Cold In (inches)	E HX Outlet (inches)	F HX Inlet (inches)	Approx. Ship Weight (lbs)
TM-60SS-HE	60	60	4500	52	23.13	45.52	4.18	4.24	21.65	115
TM-80SS-HE	80	80	4500	70	23.06	63.67	4.92	4.29	22.29	146

Description	Engineering Design					
Model Number	Energy Output (BTU/hr)	First Hour (gallons)	First Draw (gallons)	Coil Capacity (gallons)	Coil Length (ft)	R-Factor (approx)
TM-60SS-HE	62,400	127	52	1.2	20	15.2
TM-80SS-HE	62,400	152	75	1.2	20	15.2

Stainless Steel Coil Data

Maximum Pressure 150 PSI
Maximum Temperature 210°F

All tanks use the same heat exchanger, 1" ID:

Pressure drop at 1 GPM = 0.5'
Pressure drop at 2 GPM = 0.8'
Pressure drop at 3 GPM = 1.5'
Pressure drop at 4 GPM = 2.8'

Heat Exchanger inlet and outlet 1" MPT
Tank inlet and outlet 1"MPT

Alternate Energy Technologies LLC

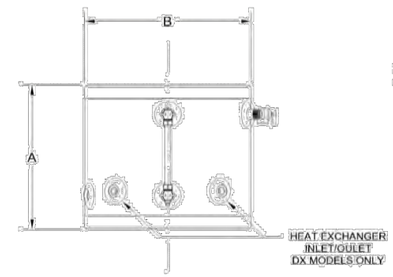

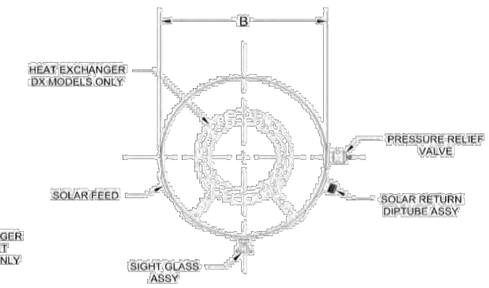

Drainback Reservoir

MODEL NUMBER	DESCRIPTION	TANK HEIGHT A	JACKET DIAMETER B	TANK VOLUME (gals)	USABLE VOLUME (gals)	SHIPPING WEIGHT (lbs)
DB-10C	10 Gal Drainback Reservoir	16.34	18.16	9.55	6.50	27

Dimensions and specifications subject to change without notice. Unless otherwise indicated, dimensions on charts shown are in inches.

Specification

Thermo-Miser™ Drainback reservoir(s) shall be model DB-10C as manufactured by Alternate Energy Technologies, LLC., or an approved equal, and shall have a limited 5-year warranty, when installed in a solar water heating installation. The drainback reservoir(s) shall have a storage capacity of 9.55 gallons and shall have a usable volume of 6.50 gallons. The drainback reservoir(s) shall be manufactured from Type 304 stainless steel base materials, totally encased in an ABS plastic shell and insulated with a CFC-Free polyurethane foam. The heat exchanger model(s) shall include an internal finned-coil heat exchanger, providing n/a ft² of contact surface area. The heat exchanger shall be produced from copper alloy C12200 and shall be mechanically connected to the stainless steel drainback reservoir with flare type fittings. The drainback reservoir(s) shall be furnished with a sight gauge assembly kit and a corrosion-resistant, pressure relief valve rated at no greater than 30 psi.

Manufactured by

Alternate Energy Technologies, LLC
1345 Energy Cove Court
Green Cove Springs, FL 32043
Phone: 904-297-9369
Fax: 904-529-9837

Distributed by

ALTERNATE ENERGY TECHNOLOGIES, LLC.
1345 ENERGY COVE COURT - GREEN COVE SPRINGS, FLORIDA 32043

NOTICES:
The thoughts and ideas expressed here within are the exclusive property of Alternate Energy Technologies, LLC. The use of these materials, without the written consent of AET, is not permitted.

PRODUCT SEPCIFICATIONS
SOLAR STORAGE TANKS

DRAWING TITLE:
SOLAR DOMESTIC HOT WATER

REVISIONS:

SEAL:

DATE:
DRAWN:
SCALE:
SHEET: 9 of 21

ST09

DTC-ES-1

Differential Temperature Controller

The EagleSun DTC-ES-1 is designed to provide maximum efficiency and flexibility in regulating solar thermal systems. With unique features, such as a variable speed drive and data transmitting, the DTC is one of the most advanced controllers available in the market today. Because it is provided by Alternate Energy Technologies, LLC., the largest solar thermal flat plate manufacturer in the country, today's innovative solar thermal industry can rely on its affordability, durability and reliability.

- **UL Listed**
- **LCD Display with Backlight for Low-light Conditions**
- **Data Transmitting to PC via RS-232**
- **Pump Speed and Time Setting**
- **Integral Variable Speed Drive**
- **Adjustable Differential Temperature Settings**
- **Holiday/Vacation Feature**
- **BTU Calculation (Flow Sensor Required)**
- **Four Temperature Sensor Ports**
- **Pump, Upper Limit, and Fault LED Light Indicators**

Specifications

Inputs

Line Voltage; Power Cord	115 Vac (L, N, G,), 15Amps
Collector Sensor, COL	10k Thermistor, 5VDC circuit
Storage Sensor, STO	10k Thermistor, 5VDC circuit
Auxiliary Sensor, AUX1	10k Thermistor, 5VDC circuit
Auxiliary Sensor, AUX2	10k Thermistor, 5VDC circuit
Flow Sensor, FLO, FS, GND, 5v	5Vdc circuits

Outputs

Collector Pump: COL PUMP	Phase controlled line voltage, Triac, 4Amps max
Storage Pump: STO PUMP	Line voltage, Relay contacts:20A (or 2HP motor) @240VAC, NO
Communications: COM	5VDC power, TX (RS-232) at 10VDC, RJ45 jack

Produced by:

MADE IN AMERICA

ALTERNATE ENERGY TECHNOLOGIES, LLC
• 851 Energy Cove Ct. • Green Cove Springs, FL 32043 • 800-874-2190 • www.aetsolar.com

ONLINE CERTIFICATIONS DIRECTORY

XAPX.E355046
Temperature-indicating and -Regulating Equipment

Page Bottom

Temperature-indicating and -Regulating Equipment

See General Information for Temperature-indicating and -Regulating Equipment

ALTERNATE ENERGY TECHNOLOGIES L L C E355046
1345 ENERGY COVE CT
GREEN COVE SPRINGS, FL 32043 USA

Investigated to UL 873

Solar Differential Temperature Control Model(s) Model No. AU7700-1

Last Updated on 2014-03-26

Questions? Print this page Terms of Use Page Top

© 2015 UL LLC

The appearance of a company's name or product in this database does not in itself assure that products so identified have been manufactured under UL's Follow-Up Service. Only those products bearing the UL Mark should be considered to be Certified and covered under UL's Follow-Up Service. Always look for the Mark on the product.

UL permits the reproduction of the material contained in the Online Certification Directory subject to the following conditions: 1. The Guide Information, Assemblies, Constructions, Designs, Systems, and/or Certifications (files) must be presented in their entirety and in a non-misleading manner, without any manipulation of the data (or drawings). 2. The statement "Reprinted from the Online Certifications Directory with permission from UL" must appear adjacent to the extracted material. In addition, the reprinted material must include a copyright notice in the following format: "© 2015 UL LLC".

NOTE: The DTC-ES-1 part number is AETs product designation for the AU7700-1 solar differential temperature control.

ALTERNATE ENERGY TECHNOLOGIES, LLC.
1345 ENERGY COVE COURT - GREEN COVE SPRINGS, FLORIDA 32043

NOTICES:
The thoughts and ideas expressed here within are the sole property of Alternate Energy Technologies, LLC. The use of these materials, without the written consent of AET, is not permitted.

PRODUCT SPECIFICATIONS
DIFFERENTIAL CONTROLLER

DRAWING TITLE:
SOLAR DOMESTIC HOT WATER

REVISIONS:

SEAL:

DATE:
DRAWN:
SCALE:
SHEET: 10 of 21

ST10

Specifications

A Hot Water Temperature Control Valve shall be installed on water heating equipment to provide tempered water to supply piping. Valve shall have a Lead Free* copper silicon alloy body. Lead Free* thermostatic valves shall comply with state codes and standards, where applicable, requiring reduced lead content. The valve shall have integral check valves and operate so the thermostat controls the cold and hot water ports. The valve shall be provided with solder (-US), threaded (-UT), PEX (-PEX), Quick-Connect (-QC) or CPVC (-CPVC) connections. Valve shall be ASSE Standard 1017** Listed. Valve shall be a Watts Series LF1170-M2 or LFL1170-M2.

Pressure — Temperature

Minimum Supply Pressure (Static): 30psi (207 kPa)

Inlet Temperatures: hot inlet, 120°F – 200°F (49°C – 93°C), cold inlet, 40°F – 85°F (4°C – 29°C)

Hot Water Inlet to Outlet Temperature Differential: 5°F (3°C) above set point

LF1170-M2 Temperature Out: Field range: 90°F – 160°F (32°C – 71°C), adjustable: Accurate within ±3°F (1.7°C)

LFL1170-M2 Temperature Out: Field range: 60°F – 120°F (16°C – 49°C), adjustable. Accurate within ±3°F (1.7°C)

Maximum Temperature: 200°F (93°C)

Maximum Pressure: 150psi (10.3 bar)

Maximum Pressure Differential Between Hot and Cold Water Supplies: 25%.

Approval: CSA B125 certified
Listing: ASSE 1017 and IAPMO UPC

Material

Body:	Lead Free* copper silicon alloy
Springs:	Stainless steel
Thermostat Assembly:	Copper
O-Rings:	EPDM
Pistons:	Polysulfone

Basic Construction

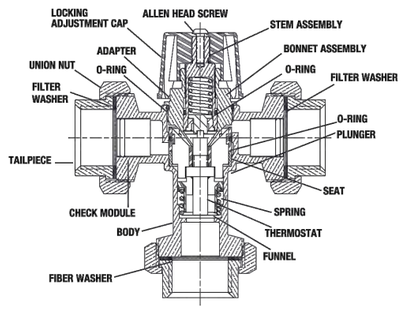

Capacity***

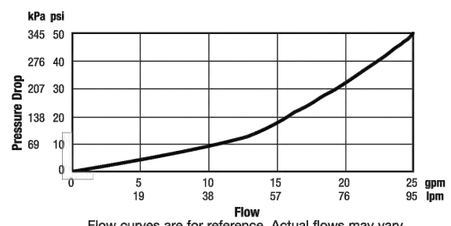

Flow curves are for reference. Actual flows may vary depending on system temperatures and/or pressures.
****Flow curve with integral inlet filters check valves*

Dimensions — Weights

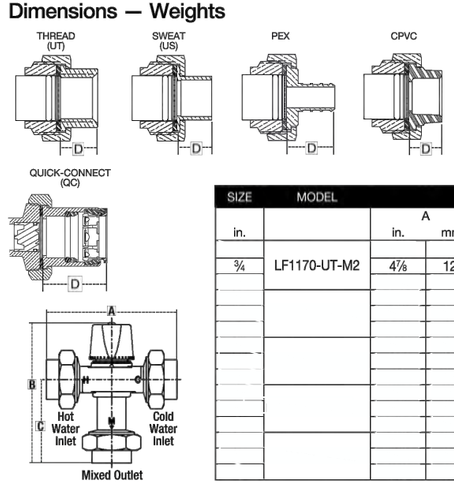

SIZE	MODEL	DIMENSIONS								WEIGHT	
		A		B		C		D			
in.		in.	mm.	in.	mm.	in.	mm.	in.	mm.	lbs.	kg.
¾	LF1170-UT-M2	4⅞	124	5 7/16	137	3 9/16	80	⅝	16	2.4	1.1

WATTS®
A Watts Water Technologies Company

USA: Tel: (978) 688-1811 • Fax: (978) 794-1848 • www.watts.com
Canada: Tel: (905) 332-4090 • Fax: (905) 332-7068 • www.watts.ca

ISO 9001-2008 CERTIFIED

ES-LF1170_LFL1170 1324

© 2013 Watts

THIS SPACE FOR DESIGNER/ENGINEER APPROVAL

Job/Customer _____	Date _____	Contractor _____
Model Specified _____	Qty _____	Approved By _____
Designer/Engineer _____	Date _____	Contractor's PO# _____
Submitted by _____	Date _____	Other _____

5170 Series

Full Port Forged Brass Ball Valves
w/ Adjustable Packing Gland
CxC
600 WOG / 150 WSP (400 WOG for 2 1/2" – 4")
ISO 9001

Standard brass products are certified to NSF/ANSI 61
Lead free products are certified to NSF/ANSI 61-G

STANDARD BRASS ITEM #	LEAD FREE ITEM #	SIZE	CTN	CASE	A	B	C	D	Cv
w/ CHROME PLATED LEVER HANDLE									
51702	51702W	1/2	10	100	1/2	2 5/16	2 1/8	3 1/2	11.5
w/ 304 STAINLESS STEEL HANDLE									
w/ WING STYLE "T" HANDLE*									
w/ 304 STAINLESS STEEL WING STYLE "T" HANDLE									
51702SSW	51702WSSW								
51703SSW	51703WSSW								
51704SSW	51704WSSW								

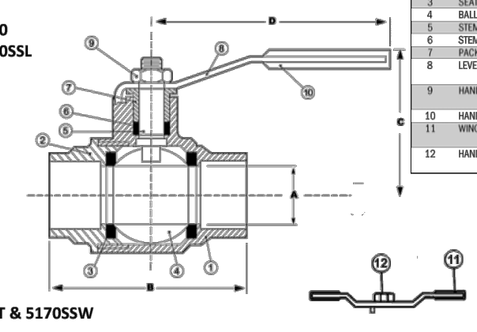

NO.	DESCRIPTION	MATERIAL
1	BODY	BRASS
2	END CAP	BRASS
3	SEAT	PTFE
4	BALL	BRASS HCP
5	STEM	BRASS
6	STEM SEAL	PTFE
7	PACKING GLAND	BRASS
8	LEVER HANDLE	STEEL CP (FOR 5170) STAINLESS STEEL (FOR 5170SSL)
9	HANDLE NUT	STEEL CP (FOR 5170) STAINLESS STEEL (FOR 5170SSL)
10	HANDLE JACKET	VINYL
11	WING STYLE "T" HANDLE	STAINLESS STEEL (FOR 5170SSW) STEEL CP (FOR 5170T)
12	HANDLE NUT	STAINLESS STEEL (FOR 5170SSW) STEEL CP (FOR 5170T)

TEMP °F	1/2" – 2" PSI	2 1/2" – 4" PSI
100	600	400
150	490	327
200	479	313
250	470	293
300	N/A	N/A
350	N/A	N/A
366	N/A	N/A

Specifications: Designed for residential, commercial or industrial use with water, oil or gas. This approved Webstone valve is actuated by a blowout proof stem and features an adjustable packing gland. Solder joint temperature ratings are per ASME B16.18 Annex A for 95-5 solder. Other solder materials have lower pressure/temperature limits. Do not silver braze or overheat valves when soldering. *5170T valves are not manufactured in an ISO facility. UPC Certification applies to valves ½" to 2".

Webstone
VALVE INNOVATION

Quality and Commitment Since 1954

www.webstonevalves.com · P: (800) 225-9529 · F: (800) 336-5133

Webstone product specifications in U.S. customary units are approximate and are provided for reference only. Webstone reserves the right to change or modify product design, construction, specifications or materials without prior notice and without incurring any obligation to make such changes and modifications on Webstone products previously or subsequently sold.

5170-5170WSpec_111312

ALTERNATE ENERGY TECHNOLOGIES, LLC.
1345 ENERGY COVE COURT - GREEN COVE SPRINGS, FLORIDA 32043

NOTICES:
The thoughts and ideas expressed here are the exclusive property of Alternate Energy Technologies, LLC. The use of these materials, without the written consent of AET, is not permitted.

PRODUCT SPECIFICATIONS
MIXING / BALL VALVES

DRAWING TITLE:
SOLAR DOMESTIC HOT WATER

REVISIONS:

SEAL:

DATE:
DRAWN:
SCALE:
SHEET: 11 of 21

ST11

CERTIFIED SOLAR COLLECTOR

SOLAR RATING & CERTIFICATION CORPORATION

SUPPLIER:
Alternate Energy Technologies
1345 Energy Cove Court
Green Cove Springs, FL 32043 USA
www.aetsolar.com

In Accordance with:
SRCC Standard 100-2010-09

BRAND:	Morning Star
MODEL:	MSC-32
COLLECTOR TYPE:	Glazed Flat Plate
CERTIFICATION #:	10001938
Original Certification:	December 11, 2014
Expiration Date:	August 28, 2026

The solar collector listed below has been evaluated by the Solar Rating & Certification Corporation™ (SRCC™), an ISO/IEC 17065 accredited and EPA recognized Certification Body, in accordance with SRCC OG-100, Operating Guidelines and Minimum Standards for Certifying Solar Collectors, and has been certified by the SRCC. This award of certification is subject to all terms and conditions of the Program Agreement and the documents incorporated therein by reference. This document must be reproduced in its entirety.

COLLECTOR THERMAL PERFORMANCE RATING

Kilowatt-hours (thermal) Per Panel Per Day				Thousands of Btu Per Panel Per Day			
Climate -> Category (Ti-Ta)	High Radiation (6.3 kWh/m².day)	Medium Radiation (4.7 kWh/m².day)	Low Radiation (3.1 kWh/m².day)	Climate -> Category (Ti-Ta)	High Radiation (2000 Btu/ft².day)	Medium Radiation (1500 Btu/ft².day)	Low Radiation (1000 Btu/ft².day)
A (-5 °C)	13.8	10.4	7.1	A (-9 °F)	47.0	35.6	24.2
B (5 °C)	12.6	9.2	5.9	B (9 °F)	42.9	31.4	20.1
C (20 °C)	10.4	7.2	3.9	C (36 °F)	35.5	24.4	13.4
D (50 °C)	5.9	3.0	0.5	D (90 °F)	20.1	10.3	1.9
E (80 °C)	1.8	0.0	0.0	E (144 °F)	6.0	0.2	0.0

A- Pool Heating (Warm Climate) **B**- Pool Heating (Cool Climate) **C**- Water Heating (Warm Climate)
D- Space & Water Heating (Cool Climate) **E**- Commercial Hot Water & Cooling

COLLECTOR SPECIFICATIONS

Gross Area:	3.035 m²	32.67 ft²	**Dry Weight:**	53 kg	116 lb
Net Aperture Area:	2.756 m²	29.67 ft²	**Fluid Capacity:**	3.8 liter	1.0 gal
Absorber Area:	2.736 m²	29.45 ft²	**Test Pressure:**	1110 kPa	161 psi

TECHNICAL INFORMATION — **Tested in accordance with:** ISO 9806:1994

ISO Efficiency Equation [NOTE: Based on gross area and (P)=Ti-Ta]

SI UNITS:	η= 0.731 - 3.66700(P/G) - 0.02790(P²/G)	**Y Intercept:**	0.747	**Slope:**	-5.494 W/m².°C
IP UNITS:	η= 0.731 - 0.64628(P/G) - 0.00273(P²/G)	**Y Intercept:**	0.747	**Slope:**	-0.968 Btu/hr.ft².°F

Incident Angle Modifier

θ	10	20	30	40	50	60	70
Kτα	1.00	0.99	0.98	0.97	0.94	0.89	0.80

Test Fluid:	Water	
Test Mass Flow Rate:	0.0845 kg/(s m²)	62.28 lb/(hr ft²)
Impact Safety Rating: 11		

REMARKS:

Jim Huggins
Technical Director

ICC-SRCC OG-100 Certified

Please verify certification is active on the SRCC website.
© Solar Rating & Certification Corporation™
www.solar-rating.org ♦ 400 High Point Drive, Suite 400 ♦ Cocoa, Florida 32926 ♦ (321) 213-6037 ♦ Fax (321) 821-0910

CERTIFIED SOLAR COLLECTOR

SOLAR RATING & CERTIFICATION CORPORATION

SUPPLIER:
Alternate Energy Technologies
1345 Energy Cove Court
Green Cove Springs, FL 32043 USA
www.aetsolar.com

In Accordance with:
SRCC Standard 100-2010-09

BRAND:	Morning Star
MODEL:	MSC-32
COLLECTOR TYPE:	Glazed Flat Plate
CERTIFICATION #:	10001938
Original Certification:	December 11, 2014
Expiration Date:	August 28, 2026

The solar collector listed below has been evaluated by the Solar Rating & Certification Corporation™ (SRCC™), an ISO/IEC 17065 accredited and EPA recognized Certification Body, in accordance with SRCC OG-100, Operating Guidelines and Minimum Standards for Certifying Solar Collectors, and has been certified by the SRCC. This award of certification is subject to all terms and conditions of the Program Agreement and the documents incorporated therein by reference. This document must be reproduced in its entirety.

ADDITIONAL INFORMATION (click here to return to the rating page)

Test Lab:	Exova Canada, Inc.	Test Date:	August 28, 2014
Test Report Number:	14-06-S0022A	Test Location:	indoors

SOLAR COLLECTOR CONSTRUCTION DETAILS

Gross Length:	2.492 m	**Gross Width:**	1.218 m	**Gross Depth:**	81.000 mm

COLLECTOR MATERIALS

Outer Cover:	Glass sheet	**Enclosure back:**	Aluminum	**Back Insulation:**	Fiber, Foam
Inner Cover:	None	**Enclosure side:**	Aluminum	**Side Insulation:**	Foam, None
Absorber Description:	Tubes connected to Fins	**Flow Pattern:**	Parallel/Harp		
Riser Tube:	Copper	**Fin:**	Copper		
Absorber Coating:	Selective	**Tube to fin connection**	Other		

GLAZING	Outer Cover	Inner Cover
Material:	Glass sheet	None
Surface Characteristics:	Smooth	
Thickness:	3.2 mm	N/A
Transmissivity:	High (equal to or greater than 90%)	
Length:	2.415 m	
Width:	1.141 m	
Tube Glazing to Header Enclosure Seal:	EPDM gasket	

ABSORBER:			**Absorber Coating:**	Selective	
Header Material:	Copper	**Header OD:**	28.6 mm	**Header Wall:**	1.0 mm
Riser Tube Material:	Copper	**Riser Tube OD:**	10.0 mm	**Riser Tube Wall Thickness:**	0.5 mm
Fin Material:	Copper	**Fin Thickness:**	0.23 mm		

ICC-SRCC OG-100 Certified

Please verify certification is active on the SRCC website.
© Solar Rating & Certification Corporation™
www.solar-rating.org ♦ 400 High Point Drive, Suite 400 ♦ Cocoa, Florida 32926 ♦ (321) 213-6037 ♦ Fax (321) 821-0910

ALTERNATE ENERGY TECHNOLOGIES, LLC.
1345 ENERGY COVE COURT - GREEN COVE SPRINGS, FLORIDA 32043

NOTICES:
The thoughts and ideas expressed herein are the exclusive property of Alternate Energy Technologies, LLC. The use of these materials, without the written consent of AET, is not permitted.

PRODUCT CERTIFICATIONS
SOLAR COLLECTORS

DRAWING TITLE:
SOLAR DOMESTIC HOT WATER

REVISIONS:

SEAL:

DATE:
DRAWN:
SCALE:
SHEET: 12 of 21

ST12 A

CERTIFIED SOLAR COLLECTOR

SOLAR RATING & CERTIFICATION CORPORATION

SUPPLIER:
Alternate Energy Technologies
1345 Energy Cove Court
Green Cove Springs, FL 32043 USA
www.aetsolar.com

In Accordance with:
SRCC Standard 100-2014-07

BRAND:	Morning Star
MODEL:	MSC-20
COLLECTOR TYPE:	Glazed Flat Plate
CERTIFICATION #:	10002012
Original Certification:	May 19, 2016
Expiration Date:	August 28, 2026

The solar collector listed below has been evaluated by the Solar Rating & Certification Corporation™ (SRCC™), an ISO/IEC 17065 accredited and EPA recognized Certification Body, in accordance with SRCC OG-100, Operating Guidelines and Minimum Standards for Certifying Solar Collectors, and has been certified by the SRCC. This award of certification is subject to all terms and conditions of the Program Agreement and the documents incorporated therein by reference. This document must be reproduced in its entirety.

COLLECTOR THERMAL PERFORMANCE RATING

Kilowatt-hours (thermal) Per Panel Per Day				Thousands of Btu Per Panel Per Day			
Climate ⇒ / Category (Ti-Ta)	High Radiation (6.3 kWh/m².day)	Medium Radiation (4.7 kWh/m².day)	Low Radiation (3.1 kWh/m².day)	Climate ⇒ / Category (Ti-Ta)	High Radiation (2000 Btu/ft².day)	Medium Radiation (1500 Btu/ft².day)	Low Radiation (1000 Btu/ft².day)
A (-5 °C)	8.6	6.5	4.4	A (-9 °F)	29.2	22.1	15.1
B (5 °C)	7.8	5.7	3.7	B (9 °F)	26.6	19.5	12.5
C (20 °C)	6.4	4.4	2.4	C (36 °F)	22.0	15.1	8.3
D (50 °C)	3.6	1.9	0.3	D (90 °F)	12.4	6.4	1.1
E (80 °C)	1.1	0.0	0.0	E (144 °F)	3.7	0.1	0.0

A- Pool Heating (Warm Climate) B- Pool Heating (Cool Climate) C- Water Heating (Warm Climate)
D- Space & Water Heating (Cool Climate) E- Commercial Hot Water & Cooling

COLLECTOR SPECIFICATIONS

Gross Area:	1.921 m²	20.68 ft²	Dry Weight:	36 kg	79 lb
Net Aperture Area:	1.712 m²	18.43 ft²	Fluid Capacity:	2.4 liter	0.6 gal
Absorber Area:	1.695 m²	18.24 ft²	Test Pressure:	1110 kPa	161 psi

TECHNICAL INFORMATION — Tested in accordance with: ISO 9806:1994

ISO Efficiency Equation [NOTE: Based on gross area and (P)=Ti-Ta]

SI UNITS:	η= 0.711 - 3.60290(P/G) - 0.02720(P²/G)	Y Intercept:	0.726	Slope:	-5.380 W/m².°C
IP UNITS:	η= 0.711 - 0.63498(P/G) - 0.00266(P²/G)	Y Intercept:	0.726	Slope:	-0.948 Btu/hr.ft².°F

Incident Angle Modifier									
θ	10	20	30	40	50	60	70	Test Fluid:	Water
Kτα	1.00	0.99	0.98	0.97	0.94	0.89	0.80	Test Mass Flow Rate:	0.0845 kg/(s m²) 62.28 lb/(hr ft²)
								Impact Safety Rating: 11	

REMARKS:

Shawn Martin
Technical Director

Print Date: May, 2016 Page 1 of 3
Please verify certification is active on the SRCC website.
© Solar Rating & Certification Corporation™
www.solar-rating.org ♦ ICC-SRCC ♦ 500 New Jersey Avenue, NW 6th Floor ♦ Washington, DC 20001 ♦ (888) 422-7233

ICC-SRCC OG-100 Certified

CERTIFIED SOLAR COLLECTOR

SOLAR RATING & CERTIFICATION CORPORATION

SUPPLIER:
Alternate Energy Technologies
1345 Energy Cove Court
Green Cove Springs, FL 32043 USA
www.aetsolar.com

In Accordance with:
SRCC Standard 100-2014-07

BRAND:	Morning Star
MODEL:	MSC-20
COLLECTOR TYPE:	Glazed Flat Plate
CERTIFICATION #:	10002012
Original Certification:	May 19, 2016
Expiration Date:	August 28, 2026

The solar collector listed below has been evaluated by the Solar Rating & Certification Corporation™ (SRCC™), an ISO/IEC 17065 accredited and EPA recognized Certification Body, in accordance with SRCC OG-100, Operating Guidelines and Minimum Standards for Certifying Solar Collectors, and has been certified by the SRCC. This award of certification is subject to all terms and conditions of the Program Agreement and the documents incorporated therein by reference. This document must be reproduced in its entirety.

ADDITIONAL INFORMATION (click here to return to the rating page)

Test Lab:	Exova Canada, Inc.	Test Date:	August 28, 2014
Test Report Number:	14-06-S0022A	Test Location:	indoors

SOLAR COLLECTOR CONSTRUCTION DETAILS

Gross Length:	1.578 m	Gross Width:	1.218 m	Gross Depth:	81.001 mm

COLLECTOR MATERIALS

Outer Cover:	Glass sheet	Enclosure back:	Aluminum	Back Insulation:	Fiber, Foam
Inner Cover:	None	Enclosure side:	Aluminum	Side Insulation:	Foam, None
Absorber Description:	Tubes connected to Fins	Flow Pattern:	Parallel/Harp		
Riser Tube:	Copper	Fin:	Copper		
Absorber Coating:	Selective	Tube to fin connection	Other		

GLAZING	Outer Cover	Inner Cover
Material:	Glass sheet	None
Surface Characteristics:	Smooth	
Thickness:	3.2 mm	N/A
Transmissivity:	High (equal to or greater than 90%)	
Length:	1.501 m	
Width:	1.141 m	
Tube Glazing to Header Enclosure Seal:	EPDM gasket	

ABSORBER:			Absorber Coating:	Selective	
Header Material:	Copper	Header OD:	28.6 mm	Header Wall:	1.0 mm
Riser Tube Material:	Copper	Riser Tube OD:	10.0 mm	Riser Tube Wall Thickness:	0.5 mm
Fin Material:	Copper	Fin Thickness:	0.23 mm		

Print Date: May, 2016 Page 2 of 3
Please verify certification is active on the SRCC website.
© Solar Rating & Certification Corporation™
www.solar-rating.org ♦ ICC-SRCC ♦ 500 New Jersey Avenue, NW 6th Floor ♦ Washington, DC 20001 ♦ (888) 422-7233

ICC-SRCC OG-100 Certified

ALTERNATE ENERGY TECHNOLOGIES, LLC.
1345 ENERGY COVE COURT - GREEN COVE SPRINGS, FLORIDA 32043

NOTICES:
The thoughts and ideas expressed herein are the exclusive property of Alternate Energy Technologies, LLC. The use of these materials, without the written consent of AET, is not permitted.

DRAWING TITLE:
PRODUCT CERTIFICATIONS
SOLAR COLLECTORS

DRAWING TITLE:
SOLAR DOMESTIC HOT WATER

REVISIONS:

SEAL:

DATE:
DRAWN:
SCALE:
SHEET: 12 of 21

ST12 B

CERTIFIED SOLAR COLLECTOR

SOLAR RATING & CERTIFICATION CORPORATION

SUPPLIER:
Alternate Energy Technologies
1345 Energy Cove Court
Green Cove Springs, FL 32043 USA
www.aetsolar.com

In Accordance with:
SRCC Standard 100-2010-09

BRAND:	Morning Star
MODEL:	MSC-32
COLLECTOR TYPE:	Glazed Flat Plate
CERTIFICATION #:	10001938
Original Certification:	December 11, 2014
Expiration Date:	August 28, 2026

The solar collector listed below has been evaluated by the Solar Rating & Certification Corporation™ (SRCC™), an ISO/IEC 17065 accredited and EPA recognized Certification Body, in accordance with SRCC OG-100, Operating Guidelines and Minimum Standards for Certifying Solar Collectors, and has been certified by the SRCC. This award of certification is subject to all terms and conditions of the Program Agreement and the documents incorporated therein by reference. This document must be reproduced in its entirety.

Flow Pattern:	Parallel/Harp				
Number of Riser Tubes:	11	**Tube Spacing:**	86.0 mm	**Number of times each riser crosses the absorber:**	1
Length of Flow Path:	2.35 m	**Riser to Fin/Plate Bond:**	Other		

INSULATION:					
Location	**Type**	**Thickness**	**Location**	**Type**	**Thickness**
Back – Top Layer:	Fiber	4.0 mm	**Sides – Inner Layer:**	Foam	15.9 mm
Back – Bottom Layer:	Foam	25.4 mm	**Sides – Outer Layer:**	None	
Enclosure Fastening Methods:	Screws				

Power Output per Collector(W) [Ti-Ta, G = 1000 W/m²]				
0	**10**	**30**	**50**	**70**
2217	2098	1807	1449	1023

PRESSURE DROP				
Flow	**ΔP**		**Flow**	**ΔP**
ml/s	**Pa**		**gpm**	**in H_20**
20	0		0.32	0.0
50	0		0.79	0.0
80	0		1.27	0.0

ICC-SRCC OG-100 Certified

Print Date: December, 2015 Page 3 of 3
Please verify certification is active on the SRCC website.
© Solar Rating & Certification Corporation™
www.solar-rating.org ♦ 400 High Point Drive, Suite 400 ♦ Cocoa, Florida 32926 ♦ (321) 213-6037 ♦ Fax (321) 821-0910

ALTERNATE ENERGY TECHNOLOGIES, LLC.
1345 ENERGY COVE COURT - GREEN COVE SPRINGS, FLORIDA 32043

NOTICES:
The thoughts and ideas expressed here within are the exclusive property of Alternate Energy Technologies, LLC. The use of these materials, without the written consent of AET, is not permitted.

PRODUCT CERTIFICATIONS
SOLAR COLLECTORS

DRAWING TITLE:
SOLAR DOMESTIC HOT WATER

REVISIONS:

SEAL:

DATE:
DRAWN:
SCALE:
SHEET: 13 of 21

ST13 A

CERTIFIED SOLAR COLLECTOR

SOLAR RATING & CERTIFICATION CORPORATION

SUPPLIER:
Alternate Energy Technologies
1345 Energy Cove Court
Green Cove Springs, FL 32043 USA
www.aetsolar.com

In Accordance with:
SRCC Standard 100-2014-07

BRAND:	Morning Star
MODEL:	MSC-20
COLLECTOR TYPE:	Glazed Flat Plate
CERTIFICATION #:	10002012
Original Certification:	May 19, 2016
Expiration Date:	August 28, 2026

The solar collector listed below has been evaluated by the Solar Rating & Certification Corporation™ (SRCC™), an ISO/IEC 17065 accredited and EPA recognized Certification Body, in accordance with SRCC OG-100, Operating Guidelines and Minimum Standards for Certifying Solar Collectors, and has been certified by the SRCC. This award of certification is subject to all terms and conditions of the Program Agreement and the documents incorporated therein by reference. This document must be reproduced in its entirety.

Flow Pattern:	Parallel/Harp				
Number of Riser Tubes:	11	Tube Spacing:	86.0 mm	Number of times each riser crosses the absorber:	1
Length of Flow Path:	1.44 m	Riser to Fin/Plate Bond:	Other		

INSULATION:

Location	Type	Thickness	Location	Type	Thickness
Back – Top Layer:	Fiber	4.0 mm	Sides – Inner Layer:	Foam	15.9 mm
Back – Bottom Layer:	Foam	25.4 mm	Sides – Outer Layer:	None	
Enclosure Fastening Methods:	Screws				

Power Output per Collector(W)
[Ti-Ta, G = 1000 W/m²]

0	10	30	50	70
1407	1332	1151	928	662

PRESSURE DROP

Flow	ΔP		Flow	ΔP
ml/s	Pa		gpm	in H_2O
20	127		0.32	0.5
50	552		0.79	2.2
80	1260		1.27	5.1

ICC-SRCC OG-100 Certified

Print Date: May, 2016 Page 3 of 3
Please verify certification is active on the SRCC website.
© Solar Rating & Certification Corporation™
www.solar-rating.org ♦ ICC-SRCC ♦ 500 New Jersey Avenue, NW 6th Floor ♦ Washington, DC 20001 ♦ (888) 422-7233

ALTERNATE ENERGY TECHNOLOGIES, LLC.
1345 ENERGY COVE COURT - GREEN COVE SPRINGS, FLORIDA 32043

NOTICES:
The thoughts and ideas expressed here within are the exclusive property of Alternate Energy Technologies, LLC. The use of these materials, without the written consent of AET, is not permitted.

PRODUCT CERTIFICATIONS
SOLAR COLLECTORS

DRAWING TITLE:
SOLAR DOMESTIC HOT WATER

REVISIONS:

SEAL:

DATE:
DRAWN:
SCALE:
SHEET: 13 of 21

ST13 B

CERTIFIED SOLAR SYSTEM

SOLAR RATING & CERTIFICATION CORPORATION

SUPPLIER:
Alternate Energy Technologies
1345 Energy Cove Court
Green Cove Springs, FL 32043 USA
www.aetsolar.com

In Accordance with:
SRCC OG-300-2008-06

BRAND:	EAGLESUN
MODEL:	DBS-G2-80-64
SYSTEM TYPE:	Pumped, Indirect
CERTIFICATION #:	2010017C
Original Certification:	February 10, 2010
Expiration Date:	March 31, 2020

The solar system listed below has been evaluated by the Solar Rating & Certification Corporation™ (SRCC™), an ISO/IEC 17065 accredited and EPA recognized Certification Body, in accordance with SRCC OG-300, Operating Guidelines for Certifying Solar Water Heating Systems, and has been certified by the SRCC. This award of certification is subject to all terms and conditions of the Program Agreement and the documents incorporated therein by reference. This document must be reproduced in its entirety.

Description: Glazed Flat Plate, Differential, -50 °C -58 °F, Water , None, Drainback, Drainback

Single-day Rating	
Solar Energy Factor (SEF_D)	Solar Fraction (SF_D)
1.3	0.53

Single-day Rating Conditions:
SEF_D = Solar Energy Factor (info link)
SF_D = Solar Fraction (info link)

SINGLE DAY RATING CONDITIONS	SI Units	Inch-Pound Units
System Set Temperature	57.2 °C	135 °F
Environmental Temperature	19.7 °C	67.5 °F
Ambient Temperature Profile Average	14.4 °C	58 °F
Water Mains Temperature	14.4 °C	58 °F
Delivered Load	43.3 MJ/day	41,045 Btu/day
Solar Irradiance	4,733 Wh/m²-day	1,500 Btu/ft²-day

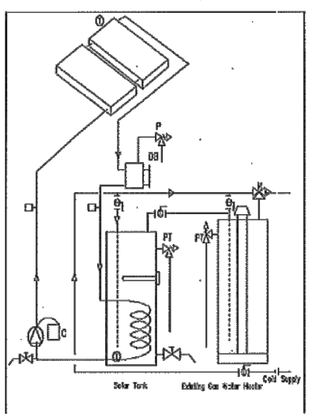

Storage Tank(s)			
Solar Tank Vol (l)	Solar Tank Vol (gal)	Aux Tank Vol (l)	Aux Tank Vol (gal)
303	80	189	50
Approximate Collector Area: 6.1 m², 65.3 ft²			

The solar water system listed here has been certified by the SRCC as meeting the minimum standards for testing, installation, operation, maintenance, performance, reliability and safety as specified in SRCC Document OG-300. Thermal performance ratings are based on the successful durability and performance testing of a sample collector, where said tests have been conducted by an independent laboratory approved and listed by the SRCC. The system has been modeled using the computer simulation program TRNSYS to calculate the ratings.

Before the Supplier can make any change in design, materials, specifications, parts, or construction, the change(s) must be reported to the SRCC for evaluation of continued certification.

REMARKS:

Jim Huggins
Technical Director

ICC-SRCC OG-300 Certified

Please verify certification is active on the SRCC website.
© Solar Rating & Certification Corporation™
www.solar-rating.org ♦ 400 High Point Drive, Suite 400 ♦ Cocoa, Florida 32926 ♦ (321) 213-6037 ♦ Fax (321) 821-0910

CERTIFIED SOLAR SYSTEM

SOLAR RATING & CERTIFICATION CORPORATION

SUPPLIER:
Alternate Energy Technologies
1345 Energy Cove Court
Green Cove Springs, FL 32043 USA
www.aetsolar.com

In Accordance with:
SRCC OG-300-2008-06

BRAND:	EAGLESUN
MODEL:	DBS-G2-80-64
SYSTEM TYPE:	Pumped, Indirect
CERTIFICATION #:	2010017C
Original Certification:	February 10, 2010
Expiration Date:	March 31, 2020

The solar system listed below has been evaluated by the Solar Rating & Certification Corporation™ (SRCC™), an ISO/IEC 17065 accredited and EPA recognized Certification Body, in accordance with SRCC OG-300, Operating Guidelines for Certifying Solar Water Heating Systems, and has been certified by the SRCC. This award of certification is subject to all terms and conditions of the Program Agreement and the documents incorporated therein by reference. This document must be reproduced in its entirety.

Only the following options for the collector array are approved:

Option	Collector Panel Manufacturer	Collector Panel Request Number	Collector Panel Model Number	Collector Panel Name	Quantity	Total Panel area(m²)	Total Panel area(ft²)
1	Alternate Energy Technologies	10001938	MSC-32	Morning Star	2	6.07	65.34

ICC-SRCC OG-300 Certified

Please verify certification is active on the SRCC website.
© Solar Rating & Certification Corporation™
www.solar-rating.org ♦ 400 High Point Drive, Suite 400 ♦ Cocoa, Florida 32926 ♦ (321) 213-6037 ♦ Fax (321) 821-0910

ALTERNATE ENERGY TECHNOLOGIES, LLC.
1345 ENERGY COVE COURT - GREEN COVE SPRINGS, FLORIDA 32043

NOTICES:
The thoughts and ideas expressed here within are the exclusive property of Alternate Energy Technologies, LLC. The use of these materials, without the written consent of AET, is not permitted.

PRODUCT CERTIFICATIONS
SOLAR WATER HEATING SYSTEM

DRAWING TITLE:
SOLAR DOMESTIC HOT WATER

REVISIONS:

SEAL:

DATE:
DRAWN:
SCALE:
SHEET: 14 of 21

ST14 A

CERTIFIED SOLAR SYSTEM

SOLAR RATING & CERTIFICATION CORPORATION

SUPPLIER:
Alternate Energy Technologies
1345 Energy Cove Court
Green Cove Springs, FL 32043 USA
www.aetsolar.com

In Accordance with:
SRCC Standard 300-2014-07

BRAND:	EAGLESUN
MODEL:	DBS-G2-60-40
SYSTEM TYPE:	Pumped, Indirect
CERTIFICATION #:	30004214
Original Certification:	May 26, 2016
Expiration Date:	May 25, 2021

The solar system listed below has been evaluated by the Solar Rating & Certification Corporation™ (SRCC™), an ISO/IEC 17065 accredited and EPA recognized Certification Body, in accordance with SRCC OG-300, Operating Guidelines for Certifying Solar Water Heating Systems, and has been certified by the SRCC. This award of certification is subject to all terms and conditions of the Program Agreement and the documents incorporated therein by reference. This document must be reproduced in its entirely.

Description: Glazed Flat Plate, Differential, -50 °C -58 °F, Water , None, Drainback, Drainback

Single-day Rating	
Solar Energy Factor (SEF_0)	Solar Fraction (SF_0)
1.0	0.40

Single-day Rating Conditions:
SEF_0 = Solar Energy Factor (info link)
SF_0 = Solar Fraction (info link)

SINGLE DAY RATING CONDITIONS	SI Units	Inch-Pound Units
System Set Temperature	57.2 °C	135 °F
Environmental Temperature	19.7 °C	67.5 °F
Ambient Temperature Profile Average	14.4 °C	58 °F
Water Mains Temperature	14.4 °C	58 °F
Delivered Load	43.3 MJ/day	41,045 Btu/day
Solar Irradiance	4,733 Wh/m²-day	1,500 Btu/ft²-day

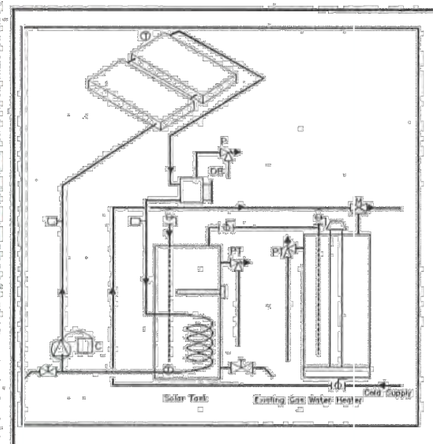

Storage Tank(s)			
Solar Tank Vol (l)	Solar Tank Vol (gal)	Aux Tank Vol (l)	Aux Tank Vol (gal)
227	60	189	50
Approximate Collector Area: 3.8 m², 41.4 ft²			

The solar water system listed here has been certified by the SRCC as meeting the minimum standards for testing, installation, operation, maintenance, performance, reliability and safety as specified in SRCC Document OG-300. Thermal performance ratings are based on the successful durability and performance testing of a sample collector, where said tests have been conducted by an independent laboratory approved and listed by the SRCC. The system has been modeled using the computer simulation program TRNSYS to calculate the ratings.

Before the Supplier can make any change in design, materials, specifications, parts, or construction, the change(s) must be reported to the SRCC for evaluation of continued certification.

REMARKS:

Shawn Martin
Technical Director

Print Date: July, 2016 Page 1 of 2
Please verify certification is active on the SRCC website.
© Solar Rating & Certification Corporation™
www.solar-rating.org ♦ ICC-SRCC ♦ 500 New Jersey Avenue, NW 6th Floor ♦ Washington, DC 20001 ♦ (888) 422-7233

ICC-SRCC OG-300 Certified

CERTIFIED SOLAR SYSTEM

SOLAR RATING & CERTIFICATION CORPORATION

SUPPLIER:
Alternate Energy Technologies
1345 Energy Cove Court
Green Cove Springs, FL 32043 USA
www.aetsolar.com

In Accordance with:
SRCC Standard 300-2014-07

BRAND:	EAGLESUN
MODEL:	DBS-G2-60-40
SYSTEM TYPE:	Pumped, Indirect
CERTIFICATION #:	30004214
Original Certification:	May 26, 2016
Expiration Date:	May 25, 2021

The solar system listed below has been evaluated by the Solar Rating & Certification Corporation™ (SRCC™), an ISO/IEC 17065 accredited and EPA recognized Certification Body, in accordance with SRCC OG-300, Operating Guidelines for Certifying Solar Water Heating Systems, and has been certified by the SRCC. This award of certification is subject to all terms and conditions of the Program Agreement and the documents incorporated therein by reference. This document must be reproduced in its entirely.

Only the following options for the collector array are approved:

Option	Collector Panel Manufacturer	Collector Panel Request Number	Collector Panel Model Number	Collector Panel Name	Quantity	Total Panel area(m²)	Total Panel area(ft²)
1	Alternate Energy Technologies	10002012	MSC-20	Morning Star	2	3.84	41.36

Print Date: July, 2016 Page 2 of 2
Please verify certification is active on the SRCC website.
© Solar Rating & Certification Corporation™
www.solar-rating.org ♦ ICC-SRCC ♦ 500 New Jersey Avenue, NW 6th Floor ♦ Washington, DC 20001 ♦ (888) 422-7233

ICC-SRCC OG-300 Certified

ALTERNATE ENERGY TECHNOLOGIES, LLC.
1345 ENERGY COVE COURT - GREEN COVE SPRINGS, FLORIDA 32043

NOTICES:
The thoughts and ideas expressed here within are the exclusive property of Alternate Energy Technologies, LLC. The use of these materials, without the written consent of AET, is not permitted.

PRODUCT CERTIFICATIONS
SOLAR WATER HEATING SYSTEM

DRAWING TITLE:
SOLAR DOMESTIC HOT WATER

REVISIONS:

SEAL:

DATE:
DRAWN:
SCALE:
SHEET: 14 of 21

ST14 B

IAPMO RESEARCH AND TESTING, INC.

5001 East Philadelphia Street, Ontario, California 91761-2816 • (909) 472-4100 Fax (909) 472-4244 • www.iapmo.org

CERTIFICATE OF LISTING

IAPMO Research and Testing, Inc. is a product certification body which tests and inspects samples taken from the supplier's stock or from the market or a combination of both to verify compliance to the requirements of applicable codes and standards. This activity is coupled with periodic surveillance of the supplier's factory and warehouses as well as the assessment of the supplier's Quality Assurance System. This listing is subject to the conditions set forth in the characteristics below and is not to be construed as any recommendation, assurance or guarantee by IAPMO Research and Testing, Inc. of the product acceptance by Authorities Having Jurisdiction.

The most updated information on this Certificate of Listing is available online at pld.iapmo.org

Effective Date: December 2015 — Void After: December 2016

Product: Collectors (Flat Plate) — File No. S-5038

Issued To: Alternate Energy Technologies LLC
1345 Energy Cove Court
Green Cove Springs, FL 32043

Identification: Permanent label showing manufacturer's name or trademark, model numbers or name and USEC® certification mark.

Characteristics: Flat plate thermal collectors for use in spa, pool, space or domestic water heat exchanger systems and energy storage. Sizes and weights are as shown. To be installed in accordance with the manufacturer's instructions and the provisions of the latest edition of the Uniform Solar Energy Code.

Products listed on this certificate have been tested by an IAPMO R&T recognized laboratory. This recognition has been granted based upon the laboratory's compliance to the applicable requirements of ISO/IEC 17025.

Products are in compliance with the following code(s):
Uniform Solar Energy Code (USEC®)
International Plumbing Code (IPC®)

Products are in compliance with the following standard(s):
SRCC Standard 100-2012

Chairman, Product Certification Committee

CEO, The IAPMO Group

This listing period is based upon the last date of the month indicated on the Effective Date and Void After Date shown above. Any change in material, manufacturing process, marking or design without having first obtained the approval of the Product Certification Committee, or any evidence of non-compliance with applicable codes and standards or of inferior workmanship, may be deemed sufficient cause for revocation of this listing. Production of or reference to this form for advertising purposes may be made only by specific written permission of IAPMO Research and Testing, Inc. Any alteration of this certificate could be grounds for revocation of the listing.

IAPMO RESEARCH AND TESTING, INC.

CERTIFICATE OF LISTING

Void After: December 2016

Product: Collectors (Flat Plate) — File No. S-5038

Issued To: Alternate Energy Technologies Llc

MODELS:

AE Series, MSC Series

Model No.	Gross Area (ft²)	Dry Weight (lbs)	Fluid Capacity (gals)	Test Pressure (psig)	Max. Oper. Temp (°F)
MSC-32	32.6	116	1.05	160	350

ALTERNATE ENERGY TECHNOLOGIES, LLC.
1345 ENERGY COVE COURT - GREEN COVE SPRINGS, FLORIDA 32043

NOTICES:
The thoughts and ideas expressed here within are the exclusive property of Alternate Energy Technologies, LLC. The use of these materials, without the written consent of AET, is not permitted.

PRODUCT CERTIFICATIONS
IAPMO LISTING - COLLECTORS

DRAWING TITLE:
SOLAR DOMESTIC HOT WATER

REVISIONS:

SEAL:

DATE:
DRAWN:
SCALE:
SHEET: 15 of 21

ST15

State of California-Health and Human Services Agency
DEPARTMENT OF COMMUNITY SERVICES AND DEVELOPMENT
2389 Gateway Oaks Drive, Suite 300, Sacramento, CA 95833
Telephone: (916) 576-7109 | Fax: (916) 263-1406
www.csd.ca.gov

LINNÉ STOUT
DIRECTOR

EDMUND G. BROWN JR.
GOVERNOR

MEMORANDUM

DATE: 1/16/15

TO: CSD Solar Water Heating Installers

FROM: California Department of Community Services and Development (CSD)

SUBJECT: California Energy Commission (CEC) Title 24 Solar Water Heating Prescriptive Criteria

---

Purpose of this Memo:

This memo is intended to clarify that CSD solar water heating systems are not subject to Title 24 prescriptive solar requirements and therefore do not require completion of form CEC-CF2R-STH-01-E.

Title 24 solar water heating prescriptive requirements apply only to new construction single family dwellings with electric water heaters OR when solar water heating systems are installed for water heating credit. CSD solar water heating systems are installed only on existing single family dwellings with natural gas water heaters AND are not installed for water heating credit.

Codes, Standards, and Guidelines:

CSD solar water heating systems are in full compliance with the following codes, standards, and guidelines:

- 2013 California Plumbing Code (CPC)
- 2013 California Mechanical Code (CMC)
- 2013 California Residential Code (CRC)
- 2012 Uniform Solar Energy Code (USEC)
- 2014 Solar Rating and Certification Corporation (SRCC) Standard 300.
- 2013 California Solar Initiative (CSI) Thermal Program Handbook Guidelines

For technical assistance regarding permits, installation, or inspection call (530) 520-6652.

Serving Low-Income Families Through Community Partners

Common Questions relating to the DBS 80-64-G2

1. **What does the model designation mean or stand for?**
   DBS is Drainback Stainless Steel Tank, G2 means a gas auxiliary and a 2 tank system, 80 is the capacity in gallons of the solar storage tank 64 is the total collector area from 2 qty 4' x 8' panels.

2. **Where is the expansion tank?**
   Drainback systems do not use an expansion tank with a bladder since the air in the collectors allow for fluid expansion. The system is initially filled at atmospheric pressure so maximum pressure in the system is low.

3. **Why are there no air vents or vacuum breakers?**
   Because this is a sealed system with a fixed amount of air, we do not need or want to vent air out of the system or we may create a vacuum which will cause pump cavitation. Vacuum breakers are also not required to drain the system provided that the piping on feed and return is sloped a minimum of 1/8" per foot continuously to the reservoir.

4. **Don't you need a check valve to prevent night time thermosiphoning?**
   No check valve is required since when the pump is off, the collectors are full of air thus making it impossible for the system to reverse thermosiphon.

5. **I hear a girgling or tinkling sound in the reservoir when the system appears to be running. What's wrong with it?**
   There is nothing wrong. The tinkling or girgling sound is normal and lets you know that the pump is running and saving you money. Call us if the green pump light on the controller is illuminated, the sun is out and there is no sound.

6. **Why is the heat exchanger single wall and not double wall?**
   Potable water is used in the potable and per the uniform solar energy code, a single wall heat exchanger can be used if a notoxic heat transfer fluid is used in the collector loop. We also have a tag added to the fill valve to state only potable water is to be used in the filling of the collector loop

7. **If water is used in the collector loop, won't the panel freeze?**
   No, at night when the pump is off, the water that was circulating in the collector loop during the day, wil drain back into the reservoir. Thus, the panels are dry and can not freeze.

8. **What about when the client leaves town for a few days. What keeps the sytem from overheating during periods of low or no use?**
   The controller will over ride the pump operation when the tank hits a preset high limit. When the pump turns off, the panels drain and are only filled with air. The collectors can withstand dry stagnation so the system is protected against overheating conditions by gravity as well.

9. **My sight glass gets slightly discolored over time. Do I drain the system and refill it?**
   No, do not drain the water in the system unless there is a failure that requires repairs. Leave the water in the system as it does not require periodic draining and flushing.

10. **Why is the solar storage tank not on a tank stand?**
    The requirement for a tank stand is limited to gas fired water heaters located in a garage. Per code, any sources of flame must be 18 inches above the floor. This is due to the fact that gasolene vapors are heavier than air and as such, any spilled gas from fueling a mower, weed eater, motorcycle or other equipment, will tend to have gasolene fumes close to ground level causing a fire or explosing hazard when the pilot light is ignited. Placing the gas fired water heater on a stand 18" above grade eliminates this issue. Consequenly, since there is no source of ignition or even an electric element in the solar storage tank, a tank stand is not required per code.

11. **Why do collectors look slightly crooked?**
    For draining, to have overheat and freeze protection.

12. **Will I run out of water during the rainy season or periods of little or no sunshine?**
    No, the exisiting gas water heater will provide the same backup support as before the solar was installed.

13. **Can this water heater make the water too hot and scald someone?**
    No, the system is equipped with a mixing valve to keep the water from getting too hot, plus, the solar control turns the pump off when the tank gets to 140°F.

14. **Why do I need 2 tanks instead of just 1 tank?**
    The second tank is to store solar heated water that is used as a pre-heat to the gas water heater.

ALTERNATE ENERGY TECHNOLOGIES, LLC.
1345 ENERGY COVE COURT - GREEN COVE SPRINGS, FLORIDA 32043

NOTICES:
The thoughts and ideas expressed here within are the exclusive property of Alternate Energy Technologies, LLC. The use of these materials, without the written consent of AET, is not permitted.

PRODUCT CERTIFICATIONS
CSD MEMO / SYSTEM Q&A

DRAWING TITLE:
SOLAR DOMESTIC HOT WATER

REVISIONS:

SEAL:

DATE:
DRAWN:
SCALE:
SHEET: 16 of 21

ST16

Inspection Guide for SDWH Systems in One- and Two-Family Dwellings

This document is a field inspection guide for SDWH systems. These inspection references detail most of the issues that relate to SDWH systems during the inspection process. All California Electrical Code (CEC), California Residential Code (CRC), California Building Code (CBC), California Mechanical Code (CMC) and California Plumbing Code (CPC) references are to the 2013 versions unless otherwise noted.

I. Major components installed match those of certified system? Yes

ROOF

I. Roof penetrations/attachments are properly flashed [CBC Chap. 15, CRC Chap. 9**]**

1503.2 Flashing / R903.2 Flashing*. Flashings shall be installed in a manner that prevents moisture from entering the wall and roof through joints in copings, through moisture permeable materials and at intersections with parapet walls and other penetrations through the roof plane.*

1503.2.1 Locations / R903.2.1 Locations*. Flashings shall be installed at wall and roof intersections, wherever there is a change in roof slope or direction and around roof openings. A flashing shall be installed to divert the water away from where the eave of a sloped roof intersects a vertical sidewall. Where flashing is of metal, the metal shall be corrosion resistant with a thickness of not less than 0.019 inch (0.5 mm) (No. 26 galvanized sheet).*

Mount flashings provided for this solar water heating system are; step-type (AET Part No. FL-8X8), made from 26 Ga galvanized steel (0.019 min thickness) or flat-type (AET Part No. FL-8X8A,) made from 0.25" aluminum sheet . Pipe flashings provided for this solar water heating system are of the Coolie-Cap style (AET Part No. RF-75) having a base flashing material of 16 oz sheet copper (0.021 min thickness).

SOLAR LOOP PIPING

I. Piping must be properly supported, hung and anchored per code [CPC 313.1]

313.1 Suspended Piping. *Suspended piping shall be supported at intervals not to exceed those shown in Table 313.1.*

Table 313.1 Hangers and Supports

Materials	Types of Joints	Horizontal	Vertical
Copper Tube and Pipe	Soldered or Brazed	1½ inches and smaller, 6 feet;	Each floor, not to exceed 10 feet
Copper	Mechanical	In accordance with standards acceptable to the Authority Having Jurisdiction	
PEX	Cold Expansion, Insert and Compression	1 inch and smaller, 32 inches;	Base and each floor, provide mid-story guides

Plumbing pipe for this solar water heating system is to be 3/4" Type L soft copper tubing (hard tubing can be used as needed to minimize pipe runs and connections). Included in the ATTIC-KIT is 10' of PVC plumbing strap and 25 pcs of #8 x 2½" deck screws, enough to secure 150' of ¾" copper pipe at 6' intervals. Piping shall be supported at intervals not to exceed those shown in Table 313.1 of the California Plumbing Code.

II. Solar piping properly insulated [see local ordinance]

120.3 Requirements For Pipe insulation. *The piping for all space-conditioning and service water-heating systems with fluid temperatures listed in TABLE 120.3-A shall have the amount of insulation specified in Subsection (a) or (b). Insulation conductivity shall be determined in accordance with ASTM C335 at the mean temperature listed in TABLE 120.3-A, and shall be rounded to the nearest 1/100 Btu-inch per hour per square foot per °F.*

Insulation shall be protected from damage, including that due to sunlight, moisture, equipment maintenance, and wind, including but not limited to, the following:

Insulation exposed to weather shall be suitable for outdoor service by either being rated by the manufacturer for outdoor use or by being covered e.g., protected by aluminum, sheet metal, painted canvas, or plastic cover. Cellular foam insulation shall be protected as above or painted with a coating that is water retardant and provides shielding from solar radiation that can cause degradation of the material.

Insulation covering chilled water piping and refrigerant suction piping located outside the conditioned space shall include a vapor retardant located outside the insulation (unless the insulation is inherently vapor retardant), all penetrations and joints of which shall be sealed.

EXCEPTION 1 to Section 120.3: *Factory-installed piping within space-conditioning equipment certified under Section 111 or 112.* Exception not applicable to this system
EXCEPTION 2 to Section 120.3: *Piping that conveys fluids with a design operating temperature range between 60°F and 105°F.* Exception not applicable to this system
EXCEPTION 3 to Section 120.3: *Gas piping, cold domestic water piping, condensate drains, roof drains, vents, or waste piping.* Pressure relief and T&P drains will not be insulated
EXCEPTION 4 to Section 120.3: *Where the heat gain or heat loss to or from piping without insulation will not increase building source energy use.* Exception not applicable to this system
EXCEPTION 5 to Section 120.3: *Piping that penetrates framing members shall not be required to have pipe insulation for the distance of the framing penetration. Metal piping that penetrates metal framing shall use grommets, plugs, wrapping or other insulating material to assure that no contact is made with the metal framing.* Copper pipe passing through walls will not be insulated as noted in this exception

(a) For insulation with a conductivity in the range shown in TABLE 120.3-A for the applicable fluid temperature range, the insulation shall have the applicable thickness shown in TABLE 120.3-A.
(b) For insulation with a conductivity outside the range shown in TABLE 120.3-A for the applicable fluid temperature range, the insulation shall have a minimum thickness as calculated with:

Table 120.3A Pipe Insulation Thickness

FLUID TEMPERATURE RANGE (°F)	CONDUCTIVITY RANGE (in Btu-inch per hour per square foot per °F)	INSULATION MEAN RATING TEMPERATURE (°F)	NOMINAL PIPE DIAMETER (in inches)				
			< 1	1 to < 1.5	1.5 to < 4	4 to < 8	8 and larger
			INSULATION THICKNESS REQUIRED (in inches)				
Space heating, Hot Water systems (steam, steam condensate and hot water) and Service Water Heating Systems							
Above 350	0.32 - 0.34	250	4.5	5.0	5.0	5.0	5.0
251 - 350	0.29 - 0.31	200	3.0	4.0	4.5	4.5	4.5
201 - 250	0.27 - 0.30	150	2.5	2.5	2.5	3.0	3.0
141 - 200	0.25 - 0.29	125	1.5	1.5	2.0	2.0	2.0
105 - 140	0.22 - 0.28	100	1.0	1.5	1.5	1.5	1.5
Space Cooling systems (chilled water, refrigerant and brine)							
40 - 60	0.21 - 0.27	75	0.5	0.5	1.0	1.0	1.0

Insulation provided for the system is to be AP/Armaflex, 7/8" ID x 1" wall thickness having a Conductivity Range of 0.245 to 0.254. In accordance with Table 120.3 of the 2013 Building Energy Efficiency Standards, a nominal pipe diameter < 1 inch requires a insulation thickness of 1.0 inches. Piping exposed to the elements (outdoors) is to be covered with aluminum or PVC jacketing specifically designed for outdoor installations.

III. Dissimilar materials isolated, as required [CPC 310.6]

310.6 Dissimilar Metals*. Except for necessary valves, where inter-membering or mixing of dissimilar metals occurs, the point of connection shall be confined to exposed or accessible locations.*

Mechanical connections used in this solar water heating system are to be of the threaded, sweat or push-fit type and should be exposed to allow for visual inspection and repair/replacement if required.

IV. Penetrations through structural members as per code [CPC 312.2]

312.2 Installation*. Piping in connection with a plumbing system shall be so installed that piping or connections will not be subject to undue strains or stresses, and provisions shall be made for expansion, contraction, and structural settlement. No plumbing piping shall be directly embedded in concrete or masonry. No structural member shall be seriously weakened or impaired by cutting, notching, or otherwise, as defined in the building code.*

Plumbing of piping should avoid penetrations through structural members. If necessary, such penetrations are to comply with local codes and installed using accepted standard practices.

V. Penetrations through fire-resistant assemblies installed per code [CPC 1505.2]

1505.2 Fire-Resistance Rating*. Where penetrating a fire resistance-rated wall, partition, floor, floor-ceiling assembly, roof-ceiling assembly, or shaft enclosure, the fire-resistance rating of the assembly shall be restored to its original rating.*

Plumbing of piping should avoid penetrations through fire-rated assemblies. If necessary, such penetrations are to be sealed using accepted standard practices and restored to its original rating to comply with local codes.

VI. System has adequate freeze protection [CPC 312.6]

312.6 Freezing Protection*. No water, soil, or waste pipe shall be installed or permitted outside of a building or in an exterior wall unless, where necessary, adequate provision is made to protect such pipe from freezing.*

This solar water heating system uses "drainback" technology (gravity drain) for freeze protection. When the system is not in operation, the collector(s) and exposed pipes are void of any heat transfer fluid. Conditions for operation are programmed in the differential temperature control and the system is activated/de-activated by these programmed settings. Piping outside of the exterior walls to have a minimum of 1" insulation, jacketed and sealed for UV protection. Pipes and equipment installed outside of the building envelope that have water in them all the time such as but not limited to the potable water lines, domestic gas water heater, drainback reservoir, and collector circuit pump, will only be installed in Climate zones 6 through 9 where the risk of freeze damage is minimal.

VII. System overheat protection [CPC 505.2]

505.2 Safety Devices*. Storage-type water heaters and hot water boilers deriving heat from fuels or types of energy other than gas, shall be provided with, in addition to the primary temperature controls, an over temperature safety protection device constructed, listed, and installed in accordance with nationally recognized applicable standards for such devices and a combination temperature and pressure-relief valve.*

This solar water heating system includes a Hot Water Temperature Control Valve (Watts Series LF1170) to provide overheat protection to the hot water supply system, a temperature/pressure relief valve, thermostat control of the gas burner and solar controller over ride for the solar circuit that shuts down the pumps when the tank reaches a preset high temperature limit.

VIII. Expansion tank sized correctly (indirect system) according to need for operation or overheat protection? [CMC 1005.3, 1005.4]

1005.3 Closed-Type Systems*. Systems of the closed type shall have an airtight tank or other air cushion that will be consistent with the volume and capacity of the system, and shall be designed for a hydrostatic test pressure of two and one-half times the allowable working pressure of the system. Expansion tanks for systems designed to operate at or above 30 pounds-force per square inch gauge (psig) (207 kPa) shall be constructed in accordance with nationally recognized standards approved by the Authority Having Jurisdiction. Provisions shall be made for draining the tank without emptying the system, except for pressurized tanks.*

NOTICES:
The thoughts and ideas expressed here within are the exclusive property of Alternate Energy Technologies, LLC. The use of these materials, without the written consent of AET, is not permitted.

ALTERNATE ENERGY TECHNOLOGIES, LLC.
1345 ENERGY COVE COURT - GREEN COVE SPRINGS, FLORIDA 32043

***1005.4 Minimum Capacity of Closed-Type Tank**. The minimum capacity of the closed-type expansion tank shall be permitted to be determined from Table 1005.4(1) and Table 1005.4(2) or from the following formula:*

Vt = [(0.00041t - 0.0466) Vs] / (Pa/Pf - Pa/Po)

Where:
Vt = Minimum volume of expansion tank, gallons
Vs = Volume of system, not including expansion tank, gallons
t = Average operating temperature, °F
Pa = Atmospheric pressure, feet H2O absolute
Pf = Fill pressure, feet H2O absolute
Po = Maximum operating pressure, feet H2O absolute

This solar water heating system is intended to be a closed-type, non-pressurized system, filled at atmospheric pressure, then closed for normal operation. Maximum operating pressure is generally < 5 psi. No expansion tank is required due to the air cushion in the collector system. Expansion tank not required for closed loop drainback system as the entrapped air in the system allows for thermal expansion of the heat transfer fluid.

IX. Pressure relief/temperature relief valve(s) installed per design (if applicable) [CPC 608.4, 608.5]

***608.4 Pressure Relief Valves**. Each pressure relief valve shall be an approved automatic type with drain, and each such relief valve shall be set at a pressure of not more than 150 psi (1034 kPa). No shutoff valve shall be installed between the relief valve and the system or in the drain line.*

The drainback reservoir used in this solar water heating system, is factory equipped with an ASME Hot Water Safety Relief Valve rated at 30 psig.

***608.5 Drains**. Relief valves located inside a building shall be provided with a drain, not smaller than the relief valve outlet, of galvanized steel, hard-drawn copper piping and fittings, CPVC, PP, or listed relief valve drain tube with fittings that will not reduce the internal bore of the pipe or tubing (straight lengths as opposed to coils) and shall extend from the valve to the outside of the building, with the end of the pipe not more than 2 feet (610 mm) nor less than 6 inches (152 mm) aboveground or the flood level of the area receiving the discharge and pointing downward. Such drains shall be permitted to terminate at other approved locations. Relief valve drains shall not terminate in a building's crawl space. No part of such drain pipe shall be trapped or subject to freezing. The terminal end of the drain pipe shall not be threaded.*

Relief valves used in this solar water heating system are to include discharge drain piping, directed to a floor drain, tank pan, outside of building, or other approved discharge location.

X. Piping labels show type of fluid and direction of flow [601.2]

***601.2 Identification of a Potable and Nonpotable Water System**. In buildings where potable water and non-potable water systems are installed, each system shall be clearly identified in accordance with Section 601.2.1 through Section 601.2.4.*

***601.2.1 Potable Water**. Green background with white lettering.*

***601.2.2 Color and Information**. Each system shall be identified with a colored pipe or band and coded with paints, wraps, and materials compatible with the piping.*

Except as required in Section 601.2.2.1, non-potable water systems shall have a yellow background with black uppercase lettering, with the words "CAUTION: NONPOTABLE WATER, DO NOT DRINK." Each non-potable system shall be identified to designate the liquid being conveyed, and the direction of normal flow shall be clearly shown. The minimum size of the letters and length of the color field shall comply with Table 601.2.2. [HCD 1 & HCD 2] An international symbol of a glass in a circle with a slash through it shall be provided similar to that shown in Figure 601 for all nonpotable water systems.

The background color and required information shall be indicated every 20 feet (6096 mm) but not less than once per room, and shall be visible from the floor level.

***601.2.3 Fixtures**. Where vacuum breakers or backflow preventers are installed with fixtures listed in Table 1401.1, identification of the discharge side shall be permitted to be omitted.*

This solar water heating system utilizes potable water for the heat transfer fluid [REF: CPC 504.4.1(2)]. The solar loop is a closed loop and the fluid is not intended for consumption once the system has been commissioned. If maintenance requires, the fluid should be drained to an approved discharge location and the system refilled with potable water upon completion of required repairs.

Labels for this system are intended to denote HOT/COLD surface temperature and direction of flow, as, all fluids associated with this system are considered potable.

XI. Drain and fill valves capped and labeled [CPC 601.2]

***601.2.4 Outlets**. Each outlet on the non-potable water line that is used for special purposes shall be posted with black uppercase lettering as follows: "CAUTION: NONPOTABLE WATER, DO NOT DRINK."*

This solar water heating system includes a single fill/drain valve on the solar loop. The solar loop is filled with potable water per CPC 504.4.1(2) and the drain valve handle removed to prevent accidental draining of the heat transfer fluid. The valve will be capped and labeled as follows: "CAUTION: POTABLE WATER, NOT INTENDED FOR CONSUMPTION."

STORAGE TANK

I. Tank labeled with pressure rating for pressurized storage [CPC 505.4]

***505.4 Indirect-Fired Water Heaters**. Indirect-fired water heaters shall comply with the applicable sections of the ASME Boiler and Pressure Vessel Code, or to one of the other applicable standards shown in Table 1401.1. Each water heater shall bear a label in accordance with ASME requirements, or an approved testing agency, certifying and attesting that such an appliance has been tested, inspected and meets the requirements of the applicable standards or code.*

***505.4.1 Single-Wall Heat Exchanger**. Indirect-fired water heater that incorporate a single-wall heat exchanger shall meet the following requirements:*

(1) Connected to a low-pressure hot water boiler limited to a maximum of 30 pounds-force per square inch gauge (psig) (207 kPa) by an approved safety or relief valve.
(2) Heater transfer medium is either potable water or contains fluids having a toxicity rating or Class of 1.
(3) Bear a label with the word "Caution," followed by the following statements:

(a) The heat-transfer medium shall be water or other nontoxic fluid having a toxic rating or Class of 1 as listed in Clinical Toxicology of Commercial Products, 5th edition.
(b) The pressure of the heat-transfer medium shall be limited to a maximum of 30 psig (207 kPa) by an approved safety or relief valve.

The word "Caution" and the statements in letters shall have an uppercase height of not less than 0.120 of an inch (3.048 mm). The vertical spacing between lines of type shall be not less than 0.046 of an inch (1.168 mm). Lowercase letters shall be compatible with the uppercase letter size specification

The water storage tank used in this system is listed under NSF Product and Service Listings, NSF/ANSI 5, Water Heaters, Hot Water Supply Boilers, and Heat Recovery Equipment. Listed units begin with date code D14JNNN.

II. Relief drain installed properly for pressurized storage [CPC 504.6, CMC 1006.1]

***504.6 Temperature, Pressure, and Vacuum Relief Devices**. The installation of temperature, pressure, and vacuum relief devices or combinations thereof, and automatic gas shutoff devices, shall be installed in accordance with the terms of their listings and the manufacturer's installation instructions.*

A shutoff valve shall not be placed between the relief valve and the water heater or on discharge pipes between such valves and the atmosphere. The hourly British thermal units (Btu) (kW•h) discharge capacity or the rated steam relief capacity of the device shall be not less than the input rating of the water heater. [NFPA 54:10.28.5]

***1006.1 General.** The discharge from relief valves shall be piped to within 18 inches (457 mm) of the floor or to an open receptacle, and where the operating temperature is in excess of 212°F (100°C), shall be equipped with a splash shield or centrifugal separator. Where the discharge from safety valves would result in a hazardous discharge of steam inside the boiler room, such discharge shall be extended outside the boiler room. No valve shall be placed between the safety or relief valve and the boiler, nor on the discharge pipe between the safety valve and the atmosphere. Discharges from relief valves on industrial boilers shall be discharged to an approved location.*

Safety relief valves included with this solar water heating system shall include drainage lines plumbed in accordance with CPC 504.6 and CMC 1006.1, and to an approved discharge location.

III. Heat exchanger must protect potable water system from being contaminated by the heat transfer medium [CPC 603.5.4]

***603.5.4 Heat Exchangers**. Heat exchangers used for heat transfer, heat recovery, or solar heating shall protect the potable water system from being contaminated by the heat-transfer medium. Single-wall heat exchangers used in indirect-fired water heaters shall meet the requirements of Section 505.4.1. Double-wall heat exchangers shall separate the potable water from the heat-transfer medium by providing a space between the two walls that are vented to the atmosphere.*

This solar water heating system utilizes potable water on both sides of a single-wall heat exchanger. The solar loop is protected from over-pressure by a 30 psig pressure relief valve as required by CPC 505.4.1(1). In addition, the city water pressure is higher than the pressure in the collector loop so if there is a breach of the heat exchanger, potable water will flow from the higher pressure supply (ie, storage tank) into the collector loop rather than the water in the collector loop flowing into the storage tank.

IV. Tank installed in garage meets code requirements [CPC 507.13]

***507.13 Installation in Garages**. Appliances in garages and in adjacent spaces that open to the garage and are not part of the living space of a dwelling unit shall be installed so that burners and burner-ignition devices are located not less than 18 inches (457 mm) above the floor unless listed as flammable vapor ignition resistant. [NFPA 54:9.1.10.1]*

***507.13.1 Physical Damage.** Appliances installed in garages, warehouses, or other areas subject to mechanical damage shall be guarded against such damage by being installed behind protective barriers or by being elevated or located out of the normal path of vehicles.*

***507.13.2 Access from the Outside Only**. Where such appliances installed within a garage are enclosed in a separate, approved compartment having access only from outside the garage, such appliances shall be permitted to be installed at floor level, provided the required combustion air is taken from and discharged to the exterior of the garage, [NFPA 54:9.1.10.3]*

The solar storage tank and drainback reservoir specified in this solar water heating system are flammable vapor ignition resistant (i.e., no source of combustion) and if installed in a garage, are to be located out of the normal path of vehicles and/or behind a protective barrier to guard against damage by vehicular contact.

V. Pan installed under tank (as required) [CPC 507.4]

***507.4 Drainage Pan**. Where a water heater is located in an attic, attic-ceiling assembly, floor-ceiling assembly, or floor subfloor assembly where damage results from a leaking water heater, a watertight pan of corrosion-resistant materials shall be installed beneath the water heater with not less than 3?4 of an inch (20 mm) diameter drain to an approved location.*

This solar water heating system includes a 26" aluminum water heater pan, furnished with a 1" PVC or CPVC drain connection to be piped to an approved drainage location.

VI. Tank installed on level surface [CPC 508.4.3]

***508.4.3 Work Platform**. A level working platform not less than 30 inches (762 mm) by 30 inches (762 mm) shall be provided in front of the service side of the appliance. [NFPA 54:9.5.2]*

This solar water heating system is to be installed on a level surface having not less than 30 inches provided in front of the service side of the tank.

NOTICES:
The thoughts and ideas expressed here within are the exclusive property of Alternate Energy Technologies, LLC. The use of these materials, without the written consent of AET, is not permitted.

ALTERNATE ENERGY TECHNOLOGIES, LLC.
1345 ENERGY COVE COURT - GREEN COVE SPRINGS, FLORIDA 32043

VII. Tank supported for seismic loads [CPC 507.2]

507.2 Seismic Provisions. *Water heaters shall be anchored or strapped to resist horizontal displacement due to earthquake motion. Strapping shall be at points within the upper one third (1?3) and lower one-third (1?3) of its vertical dimensions. At the lower point, a minimum distance of four (4) inches (102 mm) shall be maintained above the controls with the strapping.*

Note: [HCD 1 & HCD 2] *Reference Health and Safety Code Section 19211(a) which addresses new, replacement, and existing water heaters.*
Note: *The applicable subsection of Health and Safety Code Section 19211(a) which addresses new, replacement, and existing water heaters is repeated here for clarity and reads as follows:*

Section 19211(a) Notwithstanding Section 19100, all new and replacement water heaters, and all existing residential water heaters shall be braced, anchored, or strapped to resist falling or horizontal displacement due to earthquake motion. At a minimum, any water heater shall be secured in accordance with the California Plumbing Code, or modifications made thereto by a city, county, or city and county pursuant to Section 17958.5.

507.2.1 Structural Capacity. *At the locations selected for installation of the appliances and equipment, the dynamic and static load-carrying capacities of the building structure shall be checked to determine whether they are capable to carry the additional loads. The appliance shall be supported and shall be connected to the piping so as not to exert undue stress on the connections. [NFPA 54:9.1.8.4]*

The solar storage tank and drainback reservoir specified in this solar system shall be strapped for seismic loading in accordance with CPC 507.2 and/or applicable modifications required by the local Authority Having Jurisdiction. Reference Sheet ST07 of this document for recommended strapping locations and installation methods. The solar storage tank, being of a larger capacity than 50 gallons, requires 3 straps where as the drainback reservoir will require w straps if mounted on top of the solar storage tank, or 1 strap close to the top if mounted on the factory supplied tank stand due to the flange on the bottom which holds the reservoir in place.

VIII. All valves, fittings and solders are rated for potable systems and meeting CA lead law requirements [CPC 604.1]

604.1 Pipe, Tube, and Fittings. Pipe, tube, fittings, solvent cements, thread sealants, solders, and flux used in potable water systems intended to supply drinking water shall be in accordance with the requirements of NSF 61. Materials used in the water supply system, except valves and similar devices, shall be of a like material, except where otherwise approved by the Authority Having Jurisdiction. Materials for building water piping and building supply piping shall comply with the applicable standards referenced in Table 604.1.

Exception: [OSHPD 1, 2 & 4] *Use of CPVC is not permitted for applications under authority of the Office of Statewide Health Planning and Development.*

604.1.1 Local Authority to Approve CPVC Pipe Within Residential Buildings Under Specified Conditions. *[HCD 1 & HCD 2] The local responsible building official of any city, county, or city and county, shall authorize by permit the use of CPVC for hot and cold water distribution systems within the interior of residential buildings provided all of the following conditions are satisfied:*

(a) Permit Conditions. *Any building permit issued pursuant to Section 604.1.1 shall be conditioned on compliance with the mitigation measures set forth in this section.*
(b) Approved Materials. *Only CPVC plumbing material listed as an approved material and installed in accordance with this code may be used.*
(c) Installation and Use. *Any installation and use of CPVC plumbing material pursuant to this section shall comply with all applicable requirements of this code and Section 1.2 of Appendix I of this code, Installation Standard for CPVC Solvent Cemented Hot and Cold Water Distribution Systems, IAPMO IS 20-2010.*
(d) Certification of Compliance. *Prior to issuing a building permit pursuant to Section 604.1.1, the building official shall require as part of the permitting process that the contractor, or the appropriate plumbing subcontractors, provide written certification:*

(1) that is required in subdivision (e), and
(2) that he or she will comply with the flushing procedures and worker safety measures set forth in Section 1.2 of Appendix I of this code, Installation Standard for CPVC Solvent Cemented Hot and Cold Water Distribution Systems, (IAPMO IS 20-2010).

(e) Worker Safety. *Any contractor applying for a building permit that includes the use of CPVC plumbing materials authorized pursuant to this section shall include in the permit application a signed written certification stating that:*

(1) They are aware of the health and safety hazards associated with CPVC plumbing installations;
(2) They have included in their Injury and Illness Prevention Plan the hazards associated with CPVC plumbing pipe installations; and
(3) The worker safety training elements of their Injury and Illness Prevention Plan meet the Department of Industrial Relation's guidelines.

(f) Findings of Compliance. *The building official shall not give final permit approval of any CPVC plumbing materials installed pursuant to Section 604.1.1 unless he or she finds that the material has been installed in compliance with the requirements of this code and that the installer has complied with the requirements in Section 1.2.1 of Appendix I of this code, Installation Standards for CPVC Solvent Cemented Hot and Cold Water Distribution Systems, (IAPMO IS 20-2010).*
(g) Penalties. *Any contractor or subcontractor found to have failed to comply with the flushing requirements of Section 1.2.1 of Appendix I of this code or the ventilation, and glove requirements of Section 1.2.2 of Appendix I of this code, Installation Standards for CPVC Solvent Cemented Hot and Cold Water Distribution Systems, (IAPMO IS 20-2010) shall be subject to the penalties in Health and Safety Code, Division 13, Part 1.5, Chapter 6 (Section 17995 et seq.). In addition, if during the conduct of any building inspection the building official finds that the ventilation and glove requirements of Section 2.7.1 of Appendix I of this code, "Special Requirements for CPVC Installation within Residential Buildings," are being violated, such building officials shall cite the contractor or subcontractor for that violation.*

604.1.2 PEX. *All installations of PEX pipe where it is the initial plumbing piping installed in new construction shall be flushed twice over a period of at least one week. The pipe system shall be first flushed for at least 10 minutes and then filled and allowed to stand for no less than 1 week, after which all the branches of the pipe system must be flushed long enough to fully empty the contained volume. This provision shall not apply to the installation of PEX pipe where it replaces an existing pipe system of any material.*

(1) At the time of fill, each fixture shall have a removable tag applied stating:

(a) "This new plumbing system was first filled and flushed on _____ (date) by _____ (name). The State of California requires that the system be flushed after standing at least one week after the fill date specified above. If this system is used earlier than one week after the fill date, the water must be allowed to run for at least two minutes prior to use for human consumption. This tag may not be removed prior to the completion of the required second flushing, except by the building owner or occupant."

(2) Prior to issuing a building permit to install PEX pipe, the building official shall require as part of the permitting process that the contractor, or the appropriate plumbing subcontractors, provide written certification that he or she will comply with the flushing procedures set forth in the code.
(3) The building official shall not give final permit approval of any PEX plumbing installation unless he or she finds that the material has been installed in compliance with the requirements of the code, including the requirements to flush and tag the systems.
(4) Any contractor or subcontractor found to have failed to comply with the PEX flushing requirements shall be subject to the penalties in Health and Safety Code, Division 13, Part 1.5, Chapter 6 (Section 17995, et seq.).

The potable water piping of this solar water heating system is to be plumbed using 3/4" Type L soft copper pipe with solder or push-fit type connections using only materials which are NSF 61 compliant and approved by the local Authority Having Jurisdiction.

IX. Unions installed within 12" of tank connections for all piping to and from tank and heat exchangers[CPC 609.5]

609.5 Unions. *Unions shall be installed in the water supply piping not more than 12 inches (305 mm) of regulating equipment, water heating, conditioning tanks, and similar equipment that requires service by removal or replacement in a manner that will facilitate its ready removal.*

Plumbing connections to be made between this solar water heating system and the existing water heating system will be of the threaded or push-fit type, designed to facilitate ready removal or replacement if necessary.

POTABLE PIPING

I. All valves, fittings and solders are rated for potable systems and meeting CA lead law requirements [604.1]

(see 604.1 listed above)

The pipe fittings of this solar water heating system are to be stainless steel, brass or copper in construction and of the solder, threaded or push-fit type using only products which are NSF 61 compliant and approved by the local Authority Having Jurisdiction.

II. Potable water piping properly labeled [CPC 601.2]

(see 601.2 listed above)

This solar system utilizes potable water for the heat transfer fluid [REF: CPC 504.4.1(2)]. The solar loop is a closed loop and the fluid is not intended for consumption once the system has been commissioned. If maintenance requires, the fluid should be drained to an approved discharge location and the system refilled with potable water upon completion of required repairs.

Labels for this system are intended to denote HOT/COLD surface temperature and direction of flow, as, all fluids associated with this system are considered potable.

III. Any connection to PEX is more than 18" from tank fittings[CPC 604.13]

604.13 Water Heater Connectors. *Flexible metallic water heater connectors or reinforced flexible water heater connectors connecting water heating to the piping system shall be in accordance with the applicable standards referenced in Table 1401.1. Copper or stainless steel flexible connectors shall not exceed 24 inches (610 mm). PEX, PEX-ALPEX, PE-AL-PE, or PE-RT tubing shall not be installed within the first 18 inches (457 mm) of piping connected to a water heater.*

[BSC, HCD 1 & HCD 2] *PEX-AL-PEX is not adopted for use in potable water supply and distribution systems.*

PEX piping is not to be used in the potable plumbing loop of this solar water heating system.

IV. Hot water service piping insulated properly [see local ordinance]

(see CEC 120.3 listed above)

Insulation provided for the system is to be AP/Armaflex, 7/8" ID x 1" wall thickness having a Conductivity Range of 0.245 to 0.254. In accordance with Table 120.3 of the 2013 Building Energy Efficiency Standards, a nominal pipe diameter < 1 inch requires a insulation thickness of 1.0 inches. Insulation around the gas fired water heater can be no closer than 1" to double wall flue stacks or 6" to single wall flue stacks.

V. Vacuum relief valve properly installed (if required) [CPC 603.5.4, CPC 608.7]

603.5.4 Heat Exchangers. *Heat exchangers used for heat transfer, heat recovery, or solar heating shall protect the potable water system from being contaminated by the heat-transfer medium. Single-wall heat exchangers used in indirect-fired water heaters shall meet the requirements of Section 505.4.1. Double-wall heat exchangers shall separate the potable water from the heat-transfer medium by providing a space between the two walls that are vented to the atmosphere.*

608.7 Vacuum Relief Valves. *Where a hot-water storage tank or an indirect water heater is located at an elevation above the fixture outlets in the hot-water system, a vacuum relief valve shall be installed on the storage tank or heater.*

The heat exchanger utilized in this solar water heating system is of the single-wall type and plumbed as part of the solar heating loop. The solar loop is filled at atmosphere pressure and protected by a 30 psig pressure relief valve. The solar storage tanks for this water heating system are to be installed on the ground floor and do not require vacuum relief. Homes having two or more stories are not permitted under the ACCES program for low income housing.

NOTICES:
The thoughts and ideas expressed here within are the exclusive property of Alternate Energy Technologies, LLC. The use of these materials, without the written consent of AET, is not permitted.

ALTERNATE ENERGY TECHNOLOGIES, LLC.
1345 ENERGY COVE COURT - GREEN COVE SPRINGS, FLORIDA 32043

CONTROLS

I. Control and pump disconnect(s) properly installed [CEC 430 (IX), CEC 690.17]

430 IX. Disconnecting Means

430.101 General. *Part IX is intended to require disconnecting means capable of disconnecting motors and controllers from the circuit.*

> ***Informational Note No. 1:*** *See Figure 430.1.*
> ***Informational Note No. 2:*** *See 110.22 for identification of disconnecting means.*

430.102 Location*.*

> ***(A) Controller.*** *An individual disconnecting means shall be provided for each controller and shall disconnect the controller. The disconnecting means shall be located in sight from the controller location. The controller power source is a wall mounted electrical outlet. Disconnect can be from simply unplugging the controller from the wall or using the branch circuit overcurrent protection device in the breaker panel.*
> ***(B) Stationary Motors of 1/8 Horsepower or Less****. For stationary motors of 1?8 hp or less, the branch-circuit overcurrent device shall be permitted to serve as the disconnecting means. The pump motor is wired directly to the solar controller. Thus, the method of disconnecting the motor is the same as disconnecting the controller listed in (A) above*
> ***(F) Cord-and-Plug-Connected Motors****. For a cord-and plug-connected motor, a horsepower-rated attachment plug and receptacle, flanged surface inlet and cord connector, or attachment plug and cord connector having ratings no less than the motor ratings shall be permitted to serve as the disconnecting means. Horsepower-rated attachment plugs, flanged surface inlets, receptacles, or cord connectors shall not be required for cord-and-plug-connected appliances in accordance with 422.33, room air conditioners in accordance with 440.63, or portable motors rated 1?3 hp or less.*
>
> ***Exception No. 2:*** *A separate disconnecting means shall not be required for a Class 2 remote-control circuit conforming with Article 725, rated not more than 30 volts, and isolated and ungrounded.*

Power to the controller and circulation pump(s) is provided by a 120VAC, grounded circuit located in a readily accessible location. The controller is of the plug-in type (do not hard-wired) and provides power to the pump(s). Disconnect from the power occurs when the grounded is tripped or the plug is removed from the service receptacle.

690.17 Switch or Circuit Breaker. *The disconnecting means for ungrounded conductors shall consist of a manually operable switch(es) or circuit breaker(s) complying with all of the following requirements:*

The controller and pump used in this solar water heating system is grounded through the household electrical service and can be disconnected by means of the circuit breaker in the service power panel.

II. Conductors between control and power source properly installed [CEC 430 (II)]

430 II. Motor Circuit Conductors

430.21 General. *Part II specifies ampacities of conductors that are capable of carrying the motor current without overheating under the conditions specified.*

430.22 Single Motor. *Conductors that supply a single motor used in a continuous duty application shall have an ampacity of not less than 125 percent of the motor full-load current rating, as determined by 430.6(A)(1), or not less than specified in 430.22(A) through (G).*

> ***(G) Conductors for Small Motors.*** *Conductors for small motors shall not be smaller than 14 AWG unless otherwise permitted in 430.22(G)(1) or (G)(2).*

AET line cord and wiring from the controller to the pump will utilize 14 AWG wire. Total amperage for controller and pump is 1.1 amps x 1.25 = 1.4 amps continuous rating <15 amps of the rated AWG14 wire at 60°C. The controller used in this solar water heating system is equipped with a factory installed 15' power supply cord and plugs into a 120VAC, GFCI electrical receptacle. DO NOT HARDWIRE

III. Conductors between control and pump properly installed [CEC 430 (II), CEC 690 (IV)]

(see 430 (II) above)

690 IV. Wiring Methods

690.31 Methods Permitted.

(A) Wiring Systems. *All raceway and cable wiring methods included in this Code and other wiring systems and fittings specifically intended and identified for use on photovoltaic arrays shall be permitted. Where wiring devices with integral enclosures are used, sufficient length of cable shall be provided to facilitate replacement. Where photovoltaic source and output circuits operating at maximum system voltages greater than 30 volts are installed in readily accessible locations, circuit conductors shall be installed in a raceway.*

> ***Informational Note:*** *Photovoltaic modules operate at elevated temperatures when exposed to high ambient temperatures and to bright sunlight. These temperatures may routinely exceed 70°C (158°F) in many locations. Module interconnection conductors are available with insulation rated for wet locations and a temperature rating of 90°C (194°F) or greater.*

(B) Single-Conductor Cable. *Single-conductor cable type USE-2, and single-conductor cable listed and labeled as photovoltaic (PV) wire shall be permitted in exposed outdoor locations in photovoltaic source circuits for photovoltaic module interconnections within the photovoltaic array.*

> ***Exception:*** *Raceways shall be used when required by 690.31(A).*
> ***Informational Note:*** *Photovoltaic (PV) wire [also photovoltaic (PV) cable] has a nonstandard outer diameter. Conduit fill may be calculated using Table 1 of Chapter 9.*

AET's system is not a PV system so raceways, conduit and PV wire criteria do not apply.

(C) Flexible Cords and Cables*. Flexible cords and cables, where used to connect the moving parts of tracking PV modules, shall comply with Article 400 and shall be of a type identified as a hard service cord or portable power cable; they shall be suitable for extra-hard usage, listed for outdoor use, water resistant, and sunlight resistant. Allowable ampacities shall be in accordance with 400.5. For ambient temperatures exceeding 30°C (86°F), the ampacities shall be derated by the appropriate factors given in Table 690.31(C).*

Does not apply to AET's system as the line cords are all to be indoor or enclosure protected

(D) Small-Conductor Cables. *Single-conductor cables listed for outdoor use that are sunlight resistant and moisture resistant in sizes 16 AWG and 18 AWG shall be permitted for module interconnections where such cables meet the ampacity requirements of 690.8. Section 310.15 shall be used to determine the cable ampacity adjustment and correction factors.). Does not apply to AET's system as the line cords are all to be indoor or enclosure protected*

AET line cord wire is not routed in conduits but is exposed to air thus the 60C rating correction factor of 1.00 is applicable.

(F) Flexible, Fine-Stranded Cables. *Flexible, fine-stranded cables shall be terminated only with terminals, lugs, devices, or connectors in accordance with 110.14(A).*

690.32 Component Interconnections. *Fittings and connectors that are intended to be concealed at the time of on-site assembly, where listed for such use, shall be permitted for on-site interconnection of modules or other array components. Such fittings and connectors shall be equal to the wiring method employed in insulation, temperature rise, and fault-current withstand, and shall be capable of resisting the effects of the environment in which they are used.*

690.33 Connectors. *The connectors permitted by Article 690 shall comply with 690.33(A) through (E).*

> ***(A) Configuration.*** *The connectors shall be polarized and shall have a configuration that is non-interchangeable with receptacles in other electrical systems on the premises.*
>
> ***(B) Guarding.*** *The connectors shall be constructed and installed so as to guard against inadvertent contact with live parts by persons.*
>
> ***(C) Type****. The connectors shall be of the latching or locking type. Connectors that are readily accessible and that are used in circuits operating at over 30 volts, nominal, maximum system voltage for dc circuits, or 30 volts for ac circuits, shall require a tool for opening.*
>
> ***(D) Grounding Member.*** *The grounding member shall be the first to make and the last to break contact with the mating connector.*
>
> ***(E) Interruption of Circuit****. Connectors shall be either (1) or (2):*
>
> > *(1) Be rated for interrupting current without hazard to the operator.*
> >
> > *(2) Be a type that requires the use of a tool to open and marked "Do Not Disconnect Under Load" or "Not for Current Interrupting."*

690.34 Access to Boxes. *Junction, pull, and outlet boxes located behind modules or panels shall be so installed that the wiring contained in them can be rendered accessible directly or by displacement of a module(s) or panel(s) secured by removable fasteners and connected by a flexible wiring system.*

690.35 Ungrounded Photovoltaic Power Systems. *Photovoltaic power systems shall be permitted to operate with ungrounded photovoltaic source and output circuits where the system complies with 690.35(A) through (G).*

This section does not apply as this is not a PV system and the AET water heating system is grounded

> ***(A) Disconnects****. All photovoltaic source and output circuit conductors shall have disconnects complying with 690, Part III.*
> ***(B) Overcurrent Protection.*** *All photovoltaic source and output circuit conductors shall have overcurrent protection complying with 690.9.*
> ***(C) Ground-Fault Protection.*** *All photovoltaic source and output circuits shall be provided with a ground-fault protection device or system that complies with (1) through (3):*
>
> > *(1) Detects a ground fault.*
> > *(2) Indicates that a ground fault has occurred*
> > *(3) Automatically disconnects all conductors or causes the inverter or charge controller connected to the faulted circuit to automatically cease supplying power to output circuits.*
>
> ***(D)*** *The photovoltaic source conductors shall consist of the following:*
>
> > *(1) Nonmetallic jacketed multi-conductor cables*
> > *(2) Conductors installed in raceways, or*
> > *(3) Conductors listed and identified as Photovoltaic (PV) Wire installed as exposed, single conductors.*
>
> ***(E)*** *The photovoltaic power system direct-current circuits shall be permitted to be used with ungrounded battery systems complying with 690.71(G).*
> ***(F)*** *The photovoltaic power source shall be labeled with the following warning at each junction box, combiner box, disconnect, and device where energized, ungrounded circuits may be exposed during service:*
> *WARNING ELECTRIC SHOCK HAZARD. THE DC CONDUCTORS OF THIS PHOTOVOLTAIC SYSTEM ARE UNGROUNDED AND MAY BE ENERGIZED.*
> ***(G)*** *The inverters or charge controllers used in systems with ungrounded photovoltaic source and output circuits shall be listed for the purpose.*

The pump utilized in this solar water heating system is factory pre-wired to the controller with 14/3 Type SJOOW cable rated at 15 amperes at 86°F per NEC Table 400.5(A)(1). The rated ampacity of the pump is 1.1 amps at full load. The motor full load current at 125 percent is 1.4 amps which is less than the rating of the connecting cable.

NOTICES:
The thoughts and ideas expressed here within are the exclusive property of Alternate Energy Technologies, LLC. The use of these materials, without the written consent of AET, is not permitted.

ALTERNATE ENERGY TECHNOLOGIES, LLC.
1345 ENERGY COVE COURT - GREEN COVE SPRINGS, FLORIDA 32043

IV. Solar collector sensors protected from sun and weather [CEC 310.8 B, D(1), D(2)]

310.10 Uses Permitted. *The conductors described in 310.104 shall be permitted for use in any of the wiring methods covered in Chapter 3 and as specified in their respective tables or as permitted elsewhere in this Code.*

Informational Note: *Thermoplastic insulation may stiffen at temperatures lower than -10°C (+14°F). Thermoplastic insulation may also be deformed at normal temperatures where subjected to pressure, such as at points of support. Thermoplastic insulation, where used on dc circuits in wet locations, may result in electro-endosmosis between the conductor and insulation.*

(B) Dry and Damp Locations. *Insulated conductors and cables used in dry and damp locations shall be Types FEP, FEPB, MTW, PFA, RHH, RHW, RHW-2, SA, THHN, THW, THW-2, THHW, THWN, THWN-2, TW, XHH, XHHW, XHHW-2, Z, or ZW.*

(D) Locations Exposed to Direct Sunlight. *Insulated conductors or cables used where exposed to direct rays of the sun shall comply with (D)(1) or (D)(2):*

(1) Conductors and cables shall be listed, or listed and marked, as being sunlight resistant
(2) Conductors and cables shall be covered with insulating material, such as tape or sleeving, that is listed, or listed and marked, as being sunlight resistant

The sensor and sensor wire used in the exposed (outdoor) portion this solar water heating system is to be covered alongside the pipe insulation using aluminum or PVC jacketing rated for outdoor installations.

V. Control relay rated higher than load for each output [CEC 430.83]

430.83 Ratings. *The controller shall have a rating as specified in 430.83(A), unless otherwise permitted in 430.83(B) or (C), or as specified in (D), under the conditions specified.*

(A) General.

(1) Horsepower Ratings*. Controllers, other than inverse time circuit breakers and molded case switches, shall have horsepower ratings at the application voltage not lower than the horsepower rating of the motor.*
(2) Circuit Breaker. *A branch-circuit inverse time circuit breaker rated in amperes shall be permitted as a controller for all motors. Where this circuit breaker is also used for overload protection, it shall conform to the appropriate provisions of this article governing overload protection.*
(3) Molded Case Switch. *A molded case switch rated in amperes shall be permitted as a controller for all motors.*

(B) Small Motors*. Devices as specified in 430.81(A) and (B) shall be permitted as a controller.*

(C) Stationary Motors of 2 Horsepower or Less*. For stationary motors rated at 2 hp or less and 300 volts or less, the controller shall be permitted to be either of the following:*

(1) A general-use switch having an ampere rating not less than twice the full-load current rating of the motor
(2) On ac circuits, a general-use snap switch suitable only for use on ac (not general-use ac–dc snap switches) where the motor full-load current rating is not more than 80 percent of the ampere rating of the switch

(D) Torque Motors. *For torque motors, the controller shall have a continuous-duty, full-load current rating not less than the nameplate current rating of the motor. For a motor controller rated in horsepower but not marked with the foregoing current rating, the equivalent current rating shall be determined from the horsepower rating by using Table 430.247, Table 430.248, Table 430.249, or Table 430.250.*

(E) Voltage Rating. *A controller with a straight voltage rating, for example, 240 volts or 480 volts, shall be permitted to be applied in a circuit in which the nominal voltage between any two conductors does not exceed the controller's voltage rating. A controller with a slash rating, for example, 120/240 volts or 480Y/277 volts, shall only be applied in a solidly grounded circuit in which the nominal voltage to ground from any conductor does not exceed the lower of the two values of the controller's voltage rating and the nominal voltage between any two conductors does not exceed the higher value of the controller's voltage rating.*

The controller used in this solar water heating system includes a 115V variable speed triac relay rated to 4amp @ 115V. The relay provides power to the pump which is rated at 1/25 hp (0.3 amp @ 115V). The full-load current rating of the motor is less than 3 % of the amperage rating of the relay. The controller in this solar water heating system has a straight voltage rating of 120VAC and is protected by a grounded service receptacle.

NOTICES:
The thoughts and ideas expressed here within are the exclusive property of Alternate Energy Technologies, LLC. The use of these materials, without the written consent of AET, is not permitted.

ALTERNATE ENERGY TECHNOLOGIES, LLC.
1345 ENERGY COVE COURT - GREEN COVE SPRINGS, FLORIDA 32043